SOUTHERN PACIFIC COMPANY

FIREPAN TESTS
ENGINE 4401

SACRAMENTO LOCOMOTIVE
STANDING TEST PLANT

San Francisco, Calif.
July 12, 1949.

Report No. ST-4

TEST DESIGNATIONS OF DRAFT ARRANGEMENTS APPLIED TO PACIFIC LINES STANDARD FIREPAN

Test Designation	DESCRIPTION
FDS - 1	Bell Mouth Ports, bottom hopper closed.
FDS 2	Modified Bell Mouth Ports partially restricted, T&NO Burner Port.
FDS - 3	Modified Bell Mouth Ports, T&NO Burner Port.
FDS - 4	Modified Bell Mouth Ports, T&NO Burner Port, bottom hopper closed.
FDS - 5	Side draft rings ST-200 (Fig. 4-35), T&NO Burner Port.
FDS - 6	Side draft rings ST-200 (Fig. 4-35), Bottom draft ring ST-201 (Fig. 4-36) T&NO Burner Port.
FDS - 7	Rings ST-200 & ST-201 (Figs. 4-35 and 4-36), T&NO Burner Port, modified draft chutes.
FDS - 8	Rings ST-202 & ST-201 (Figs. 4-36 and 4-37), T&NO Burner Port, modified draft chutes.
FDS - 9	Rings ST-202 & ST-201 (Figs. 4-36 and 4-37), T&NO Burner Port, modified draft chutes, modified Sheedy burner with air connection.
FDS -10	Rings ST-202 & ST-201 (Figs. 4-36 and 4-37), T&NO Burner Port, modified draft chutes, Standard Sheedy Burner.
FDS -11	Rings ST-202 & ST-201 (Figs. 4-36 and 4-37), modified draft chutes.
FDS -12	Pacific Lines Standard firepan, with bottom ring ST-201, but bottom hopper closed.
FDS -13	Rings ST-215A & ST-201 (Figs. 4-36 and 4-39), modified draft chutes.
FDS -14	Rings ST-215A & ST-201 (Figs. 4-36 and 4-39), modified draft chutes, bottom hopper closed.
FDS -15	Rings ST-202 (Raised) & ST-201 (Figs. 4-36 and 4-37), modified draft chutes.
FDS -16	Rings ST-202 (Raised) & ST-201 (Figs. 4-36 and 4-37) modified draft chutes, bottom hopper closed.

INDEX OF TESTS

Test Designation	DESCRIPTION
FDS -17	Rings ST-215B & ST-201 (Figs. 4-36 and 4-39).
FDS -18	Rings ST-215B & ST-201 (Figs. 4-36 and 4-39), bottom hopper closed.
FDS -19	Rings ST-215B & ST-201 (Figs. 4-36 and 4-39), six 5½" draft holes, dampers weighted.
FDS -20	Rings ST-202 (Raised and Forward), & ST-201 (Figs. 4-36 and 4-37), bottom hopper closed.
FDS -21	Rings ST-201 (Fig. 4-36), side openings 5-3/4" x 32½", bottom hopper closed.
FDS -22	Rings ST-258 (Positions 2 & 3 Right Side, & 3 and 4 Left Side), & ST-201 (Figs. 4-36 and 4-40), Burner Port restricted to 7¼" x 8", bottom hopper closed.
FDS -23	Rings ST-258 (Positions 2,3 & 4 Right & Left Sides, openings restricted to 3 3/4" x 7½") & ST-201 (Figs. 4-36 and 4-40), Burner Port restricted to 5½" x 8", bottom hopper closed.
FDS -24	Rings ST-258 (Positions 3 & 4 Right & Left Sides) & ST-201 (Figs. 4-36 and 4-40), Burner Port restricted to 6½" x 8", bottom hopper closed.
FDS -25	Rings ST-259 (Positions 3 & 4 Right & Left Sides), & ST-201 (Figs. 4-36 and 4-41), Burner Port restricted to 6½" x 8", bottom hopper closed.
FDS -26	Rings ST-259 (Positions 3 & 4 Right & Left Sides), with draft chutes. Ring ST-201 (Figs. 4-36 & 4-41), Burner Port restricted to 6½" x 8", bottom hopper closed, burner tilted up 4° from horizontal.
FDS -27	Same as FDS 26 but burner tilted up 1° from horizontal.
FDS -28	Rings ST-260 (Positions 3 & 4 Right & Left Sides), restricted to 9½" x 7½" with draft chutes and Ring ST-201 (Figs. 4-36 & 4-42), burner port restricted to 6½" x 8", bottom hopper closed, burner tilted up 1° from horizontal.
FDS -29	Rings ST-258 (Position 2 Right & Left Sides), & ST-260- (Position 3 Right & Left Sides) with draft chutes on all 4 rings. Bottom Ring ST-201 (Figs. 4-36, 4-40, & 4-42), Burner Port reduced to 5¼" x 8", bottom hopper closed, burner tilted up 1° from horizontal.

TEST DESIGNATIONS OF DRAFT ARRANGEMENTS APPLIED TO T&NO STANDARD FIREPAN

Test Designation	DESCRIPTION
FDT - 1	Standard T&NO Firepan.
FDT - 2	Rounded approaches to burner port and bottom hopper.
FDT - 3	Battelle Steam-Air Jets (Positions C & D Right & Left Sides).
FDT - 4	8" x 8½" Burner Port, five 5½" Flues on Right Side & also 5 on Left Side.
FDT - 5	St. L&SW Burner, 9" x 8½" Burner Port, Sixteen 2" Tubes on Right Side & 16 on Left Side. Dutch Oven 40" long American Arch Design.
FDT - 6	St. L&SW Burner, 9" x 8½" Burner Port, Sixteen 2" Tubes on Right Side and 16 on Left Side. Dutch Oven, 31" long - American Arch Design.
FDT - 7	St. L&SW Burner, 9" x 8½" Burner Port, Sixteen 2" Tubes on Right Side and 16 on Left Side - Dutch Oven, SP Design.
FDT - 8	9" x 8½" Burner Port, Sixteen 2" Tubes on Right Side & 16 on Left Side - Dutch Oven, SP Design.
FDT - 9	9" x 8½" Burner Port, Sixteen 2" Tubes on Right Side & 16 on Left Side - Dutch Oven, SP Design, bottom opening 6" x 19¼".

SMOKEBOX ARRANGEMENT DESIGNATIONS
FOR
FIREPAN AND DRAFT ARRANGEMENT TESTS - ENGINE 4401

Test Designation of Smokebox Arrangement	DESCRIPTION				
	Nozzle Dia.	Cross Split	Stack Height Above Nozzle	Spark Arrester	Sand Ejector
A	8"	3/4" SP	13½"	With	Without
B	8"	3/4" T&NO	13½"	With	Without
J	8"	1/2" SP	10"	With	Without
L	8¼"	1/2" SP	10"	With	Without
O	8"	5/8" x 3" BB	10"	With	Without
P	8¼"	1/2" SP	13½"	With	Without
Q	8"	5/8" x 3" BB	13½"	With	Without
R	8"	3/4" x 3" BB	13½"	With	Without
S	8"	5/8" x 2" BB	13½"	With	Without
T	8"	1/2" x 2" BB	13½"	With	Without
U	8"	3/4" x 4½" BB	13½"	With	Without
V	8¼"	1/2" SP	13½"	Without	With
W	8"	5/8" x 2" BB	13½"	Without	Without
X	8¼"	1/2" SP*	13½"	Without	Without
Y	8"	1/2" x 3" BB	13½"	Without	Without
Z	8¼"	5/8" x 2" BB	13½"	Without	With
AA	8¼"	1/2" SP*	13½"	Without	With

* SP style cross split with bottom edge 1/8" below top of nozzle; others of this style have diagonal flush with top surface of nozzle.

BB cross splits shown on Fig. 4-43.

FIREPAN
ARRANGEMENT
SOUTHERN PACIFIC CO.
PACIFIC LINES

FIG. 4-1

FIREPAN
ARRANGEMENT
SOUTHERN PACIFIC CO.
T & NO LINES

FIG. 4-2

B
B
A
A
LONGITUDINAL SECTION ON ℄
HALF SECTION A-A
HALF SECTION B-B
FIREPAN
ARRANGEMENT
TEXAS AND PACIFIC
RAILWAY CO.

Fig. 4-3

FIREPAN
ARRANGEMENT
WESTERN PACIFIC
R.R. CO.

FIG. 4-4

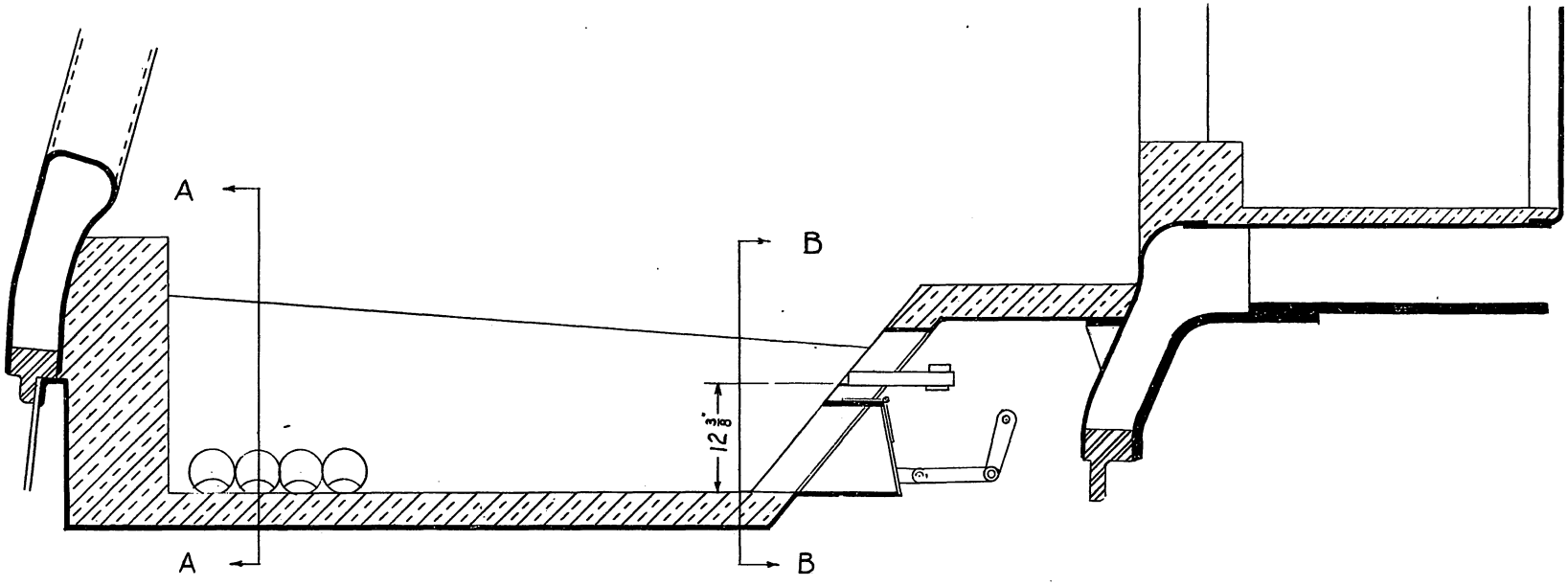

LONGITUDINAL SECTION ON ℄

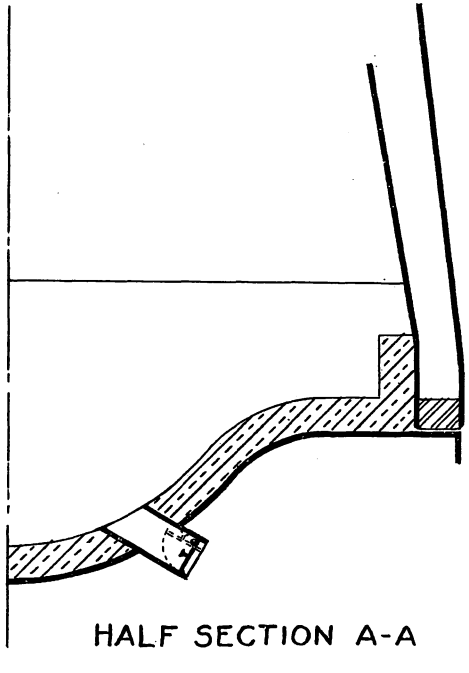

HALF SECTION A-A

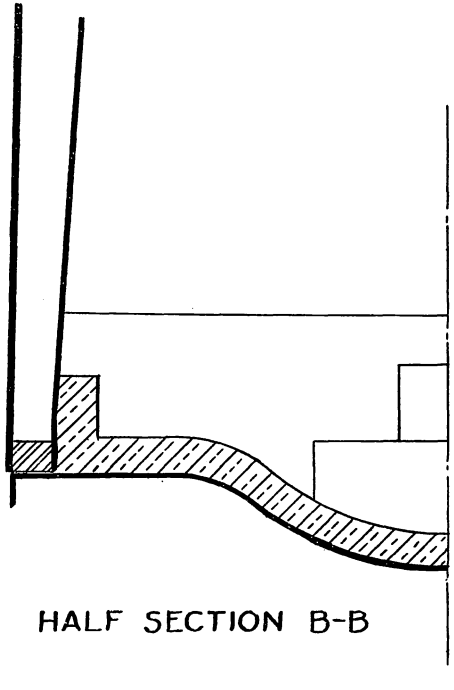

HALF SECTION B-B

FIREPAN ARRANGEMENT
GREAT NORTHERN RAILWAY CO.

FIG. 4-5

FIREPAN
ARRANGEMENT
CHICAGO, MILWAUKEE, ST. PAUL,
& PACIFIC R.R. CO.

FIG. 4-6

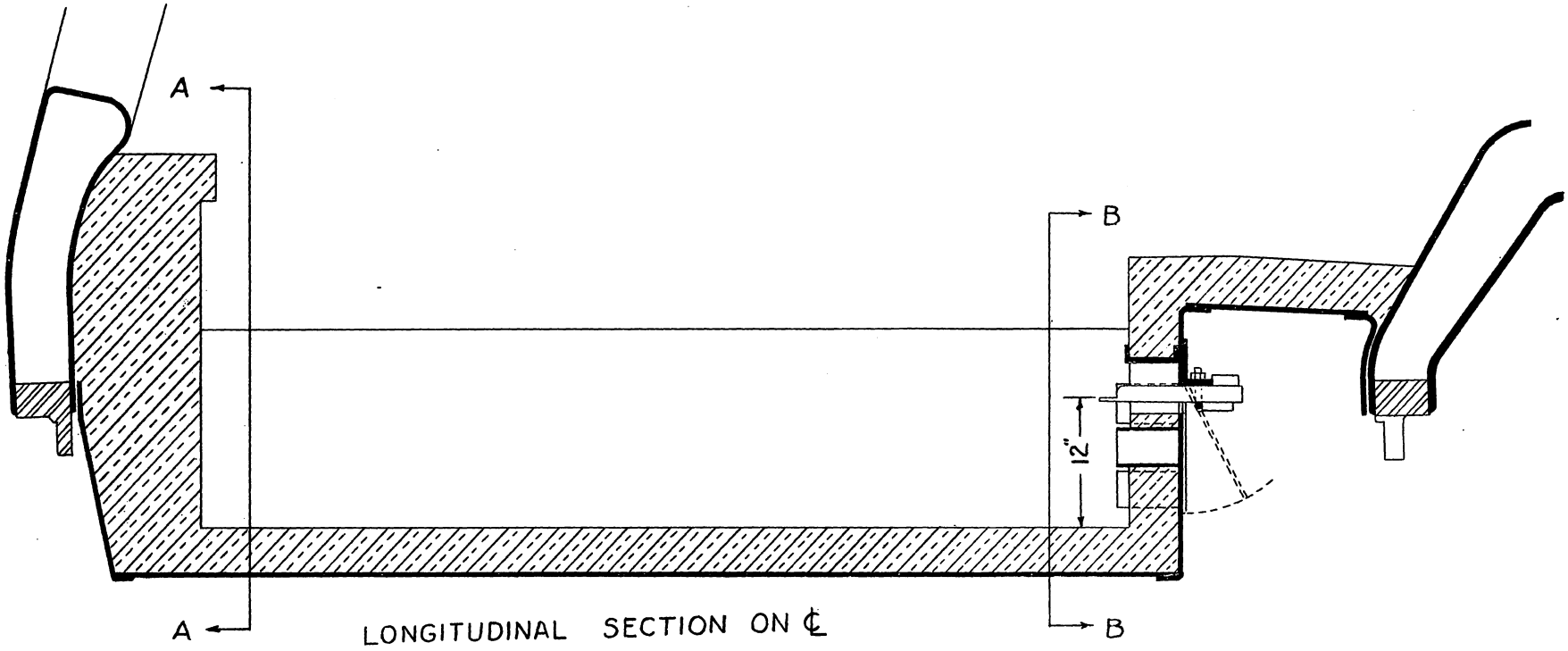

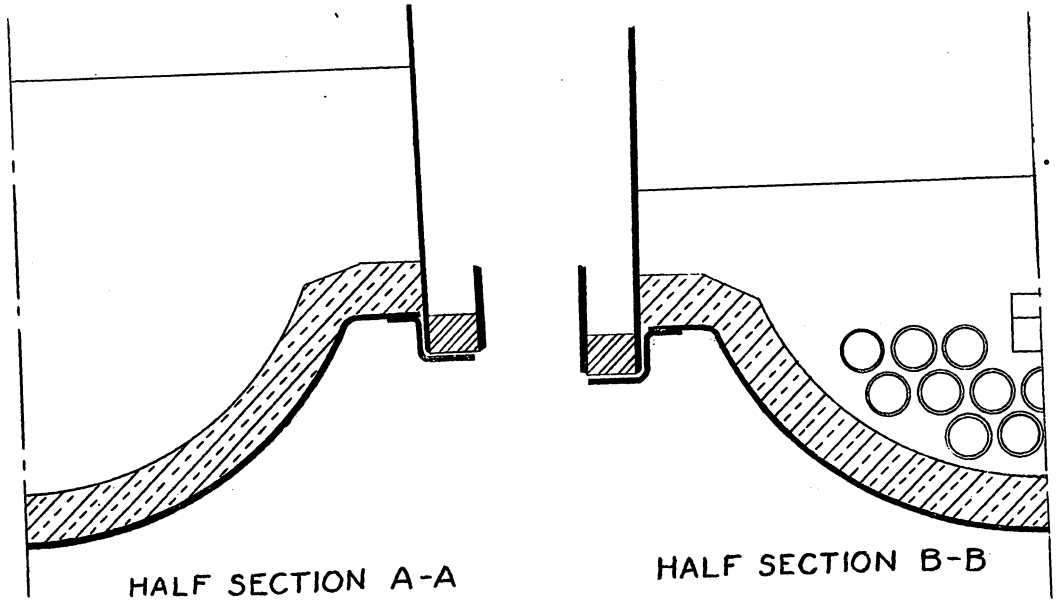

FIREPAN ARRANGEMENT
SPOKANE, PORTLAND & SEATTLE RY. CO.

FIG. 4-7

FIREPAN
ARRANGEMENT

KANSAS CITY SOUTHERN
RY. CO.

FIG. 4-8

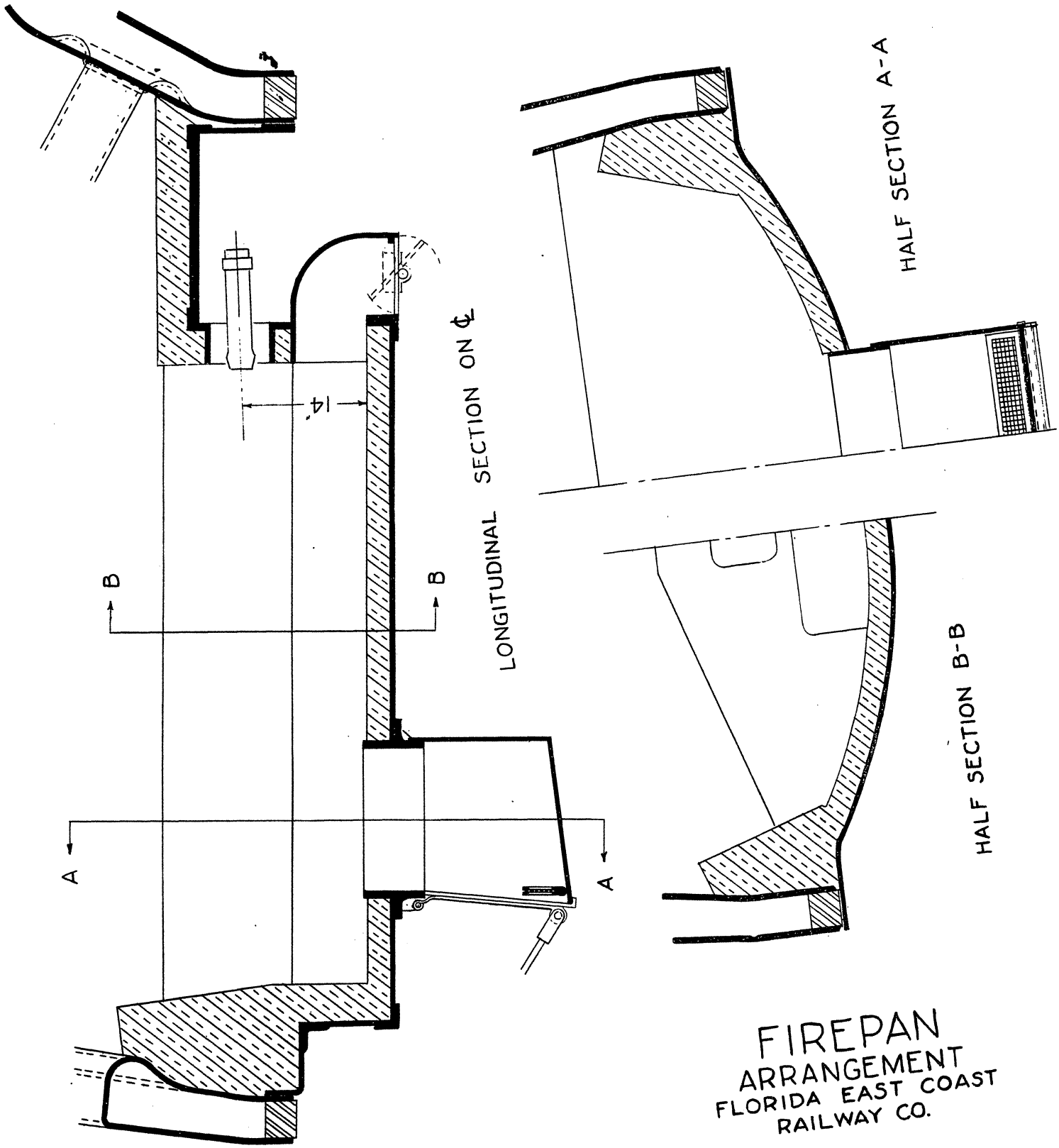
LONGITUDINAL SECTION ON ℄
HALF SECTION A-A
HALF SECTION B-B
14"
A
A
B
B
FIREPAN
ARRANGEMENT
FLORIDA EAST COAST
RAILWAY CO.

FIG. 4-9

FIREPAN
ARRANGEMENT
ST. LOUIS SOUTHWESTERN
RAILWAY CO.

FIG. 4-10

FIREPAN
ARRANGEMENT
NORTHERN PACIFIC
RAILWAY CO.

Fig. 4-11

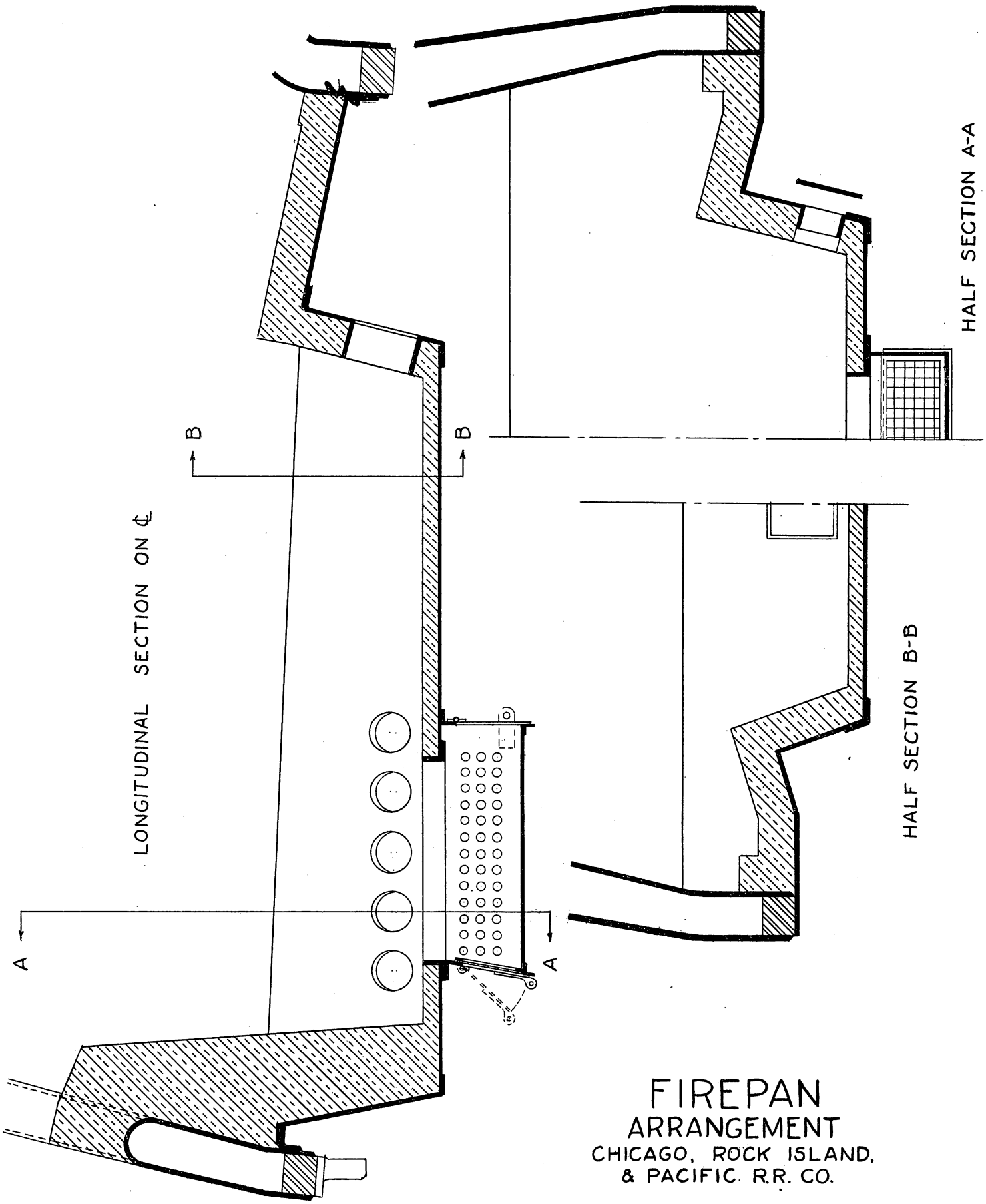

FIREPAN
ARRANGEMENT
CHICAGO, ROCK ISLAND,
& PACIFIC R.R. CO.

FIG. 4-12

"B"
"B"
11
LONGITUDINAL SECTION ON ℄
"A"
"A"
HALF SECTION "A-A"
HALF SECTION "B-B"
FIREPAN
ARRANGEMENT
UNION PACIFIC
RAILROAD CO.

FIG. 4-13

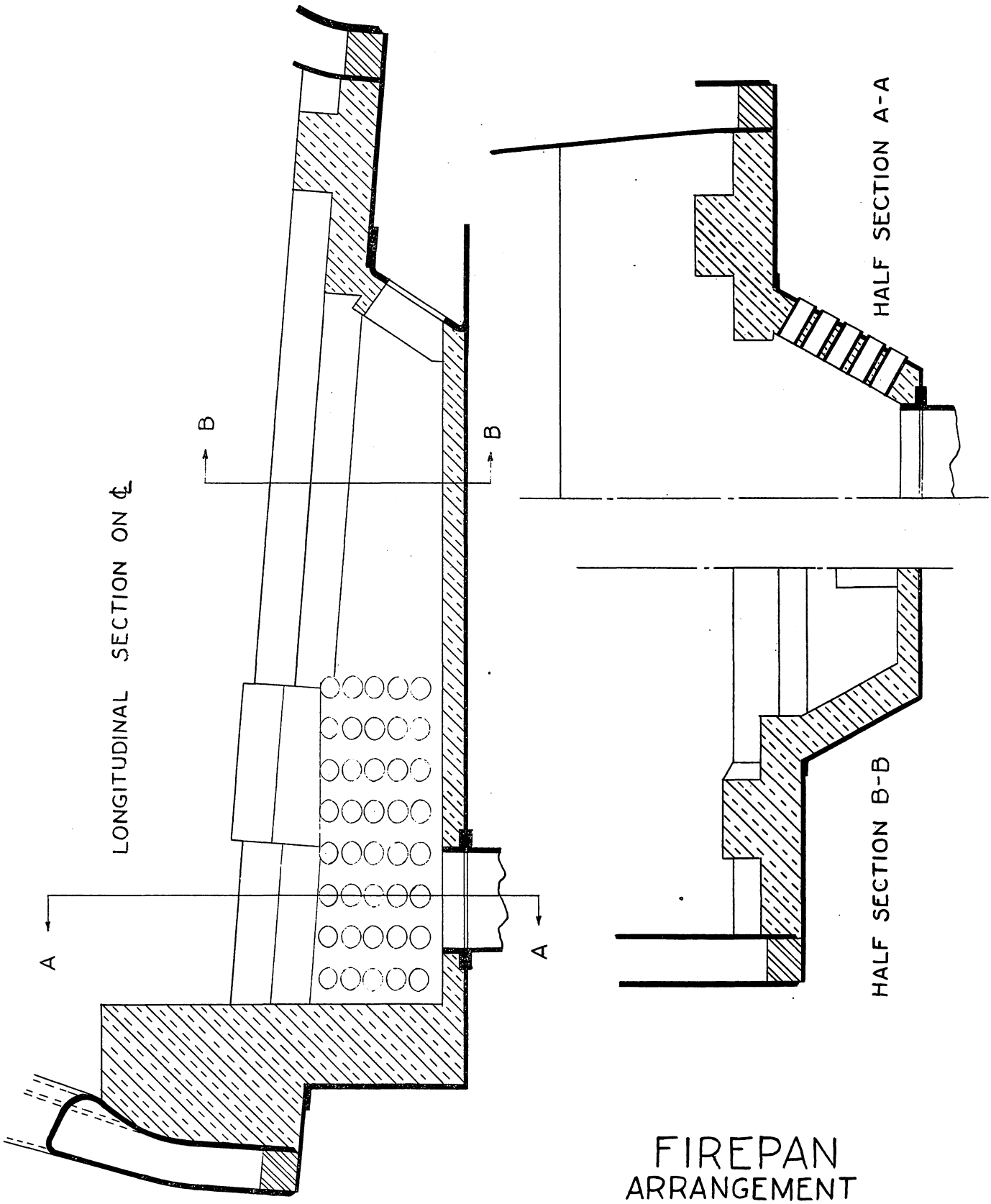

FIREPAN
ARRANGEMENT
ATCHISON TOPEKA &
SANTA FE RY. CO.

FIG. 4-14

LONGITUDINAL SECTION ON ℄
HALF SECTION A-A
HALF SECTION B-B
A
A
B
B
FIREPAN
ARRANGEMENT
CHICAGO BURLINGTON
& QUINCY R.R.

FIG. 4-15

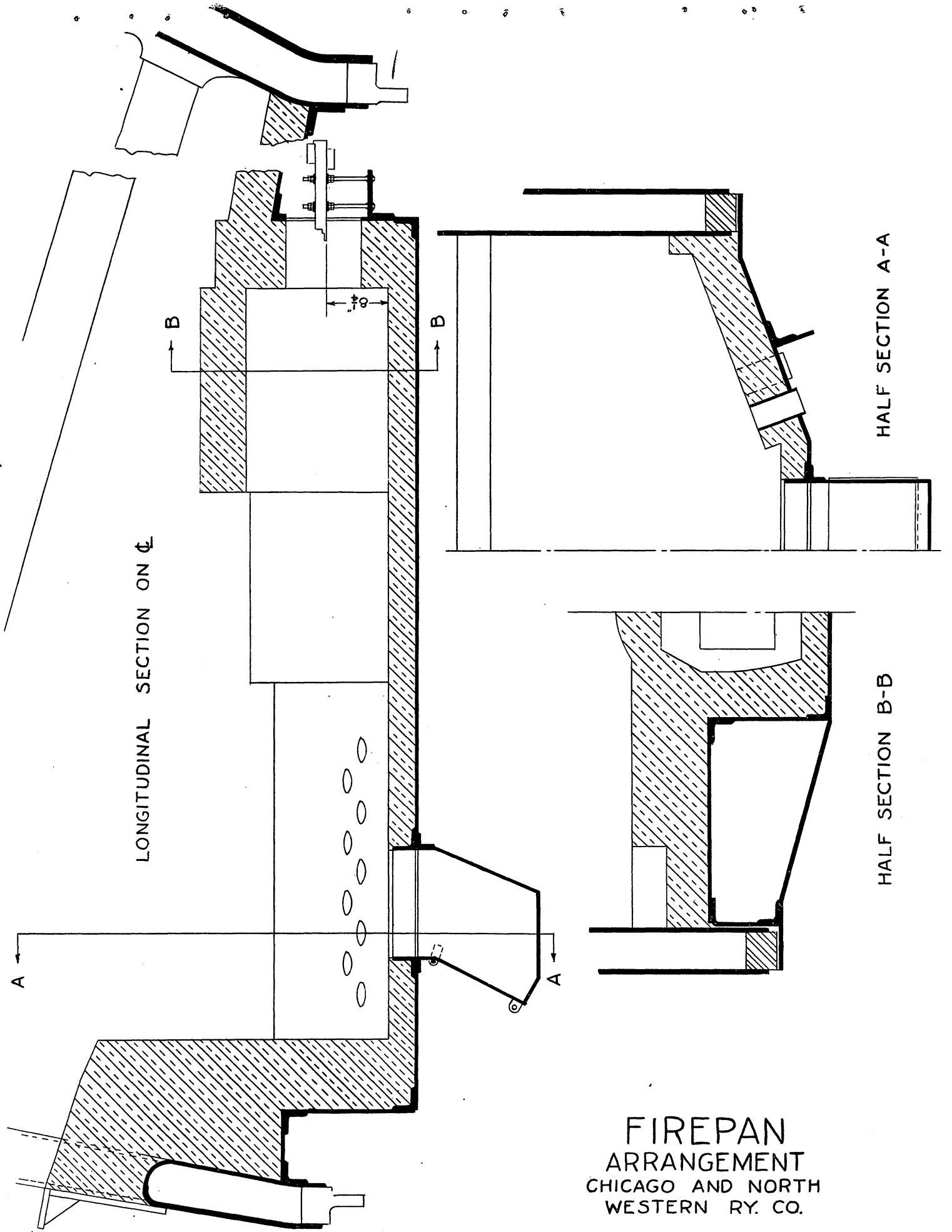
LONGITUDINAL SECTION ON ℄
HALF SECTION A-A
HALF SECTION B-B
A
A
B
B
8¼"
FIREPAN
ARRANGEMENT
CHICAGO AND NORTH
WESTERN RY. CO.

Fig. 4-16

FIREPAN
ARRANGEMENT
CANADIAN NATIONAL
RAILWAYS

FIG. 4-17

SUMMARY OF DATA

TEST ARRANGEMENT	TEST DESIGNATION	EXHAUST NOZZLE PRESSURE PSIG	FIRING RATE		TEMPERATURES, DEG. FAHRENHEIT			DRAFTS - INCHES, WATER			WATER RATES 1000 lbs. Per Hour		STEAM RATES 1000 lbs. Per Hour		BOILER EFFICIENCIES - %		FLUE GAS COMPOSITION - %			AIR FLOW FROM FLUE GAS ANALYSIS		
			1000 lbs. Per Hr.	BTU per Hr in Millions	EXHAUST STEAM	SUPER-HEATED STEAM	FLUE GAS	INSIDE ARRESTER	BEHIND ARRESTER	FIREBOX	WATER FROM TENDER	WATER TO BOILER	STEAM TO NOZZLE	EQUIV. EVAP. from and at 212 °F.	EXCLUDING FEEDWATER HEATER	INCLUDING FEEDWATER HEATER	CARBON DIOXIDE	OXYGEN	CARBON MONOXIDE	LBS. AIR PER LB. OF OIL	LBS. AIR PER HOUR-THOUSANDS	PERCENT EXCESS AIR
8" Nozzle, 3/4" Split, Stack 13½" above nozzle, Battelle Ports.	FDS-1-A	18.1	5.87	107.0	393	709	579	19.8	19.3	8.0	59.2	67.5	57.9	81.1	73.5	85.2	9.4	9.1	0.0	24.0	140.8	63.4
		13.5	5.02	91.5	369	689	566	16.0	15.7	6.7	51.2	57.7	50.0	69.3	73.4	84.4	8.8	9.0	0.0	24.9	125.2	69.4
		8.8	4.05	73.7	349	665	540	11.8	11.6	5.2	41.6	46.4	40.4	55.8	73.4	83.5	8.3	9.1	0.2	25.4	103.0	73.0
		5.1	3.21	58.4	330	629	517	7.2	7.0	3.1	32.4	35.8	31.3	42.7	70.9	80.1	7.6	10.2	0.2	28.0	89.8	90.5
8¼" Nozzle, 1/2" Split, Stack 10" above nozzle, Battelle Ports.	FDS-1-L	13.2	6.15	112.4	377	702	582	15.6	15.3	6.6	63.9	71.6	62.6	86.4	74.6	85.8	11.2	5.6	0.0	19.7	120.8	33.6
		11.6	5.70	104.1	366	694	575	14.7	14.4	6.5	60.2	67.3	58.9	81.2	75.7	86.7	10.8	5.9	0.0	20.3	115.6	36.9
		8.1	4.71	86.0	346	672	553	11.3	11.1	5.3	51.2	57.2	50.0	68.9	77.7	88.4	10.7	6.2	0.0	20.5	96.7	39.6
		4.7	3.68	67.2	327	640	532	7.0	6.9	3.2	40.2	44.5	39.1	53.5	77.2	86.8	10.2	6.8	0.0	21.5	79.0	45.3
8" Nozzle, 1/2" Split, Stack Height 10", Partly Restricted Modified Bell Mouth Ports.	FDS-2-J	17.6	6.47	117.9	390	719	607	21.4	-	11.8	66.8	74.9	65.4	90.4	74.4	86.1	11.4	4.8	0.4	18.7	120.8	26.6
		13.0	5.48	99.9	368	706	586	18.1	-	10.3	58.1	65.1	56.8	78.8	76.5	87.8	11.2	5.8	0.2	19.5	107.0	35.5
		8.2	4.43	80.7	349	688	567	13.3	-	7.7	47.3	53.0	46.1	64.2	77.2	87.9	10.8	6.4	0.0	20.5	90.9	41.6
		4.8	3.47	63.2	328	649	539	8.6	-	5.0	36.8	40.9	35.7	49.3	75.7	85.3	10.4	6.8	0.0	21.2	73.5	45.4
8" Nozzle, 1/2" Split, Stack Height 10", Modified Bell Mouth Ports, TaNO Burner Port.	FDS-3-J	17.7	6.57	119.6	393	725	612	18.9	-	8.8	66.8	74.9	65.5	90.7	73.6	85.1	11.9	5.1	0.3	18.1	120.8	29.5
		13.0	5.58	101.7	369	710	595	15.3	-	7.2	58.0	64.9	56.7	78.7	75.1	86.3	10.7	5.8	0.2	20.1	112.1	35.2
		8.2	4.47	81.4	346	685	571	10.8	-	5.1	47.1	52.7	45.9	63.8	76.1	86.7	11.0	7.0	0.2	20.2	90.5	47.2
		4.9	3.51	63.9	331	660	552	6.9	-	3.2	36.7	40.7	35.6	49.3	74.8	84.6	9.9	7.2	0.0	22.1	77.4	49.3
8" Nozzle, 5/8" x 3" Basket Bridge, Stack Height 10", Modified Bell Mouth Ports, TaNO Burner Port.	FDS-3-O	12.3	6.31	116.0	362	718	612	16.4	-	7.7	64.9	72.5	63.6	88.2	74.2	85.1	11.5	4.5	0.5	18.3	115.6	24.0
		9.8	5.41	98.9	357	702	592	13.6	-	6.6	57.9	64.6	56.6	78.5	77.0	87.8	11.3	5.1	0.3	19.0	102.8	29.2
		7.2	4.63	84.7	344	683	575	10.5	-	5.0	50.1	55.8	48.9	67.7	77.5	87.8	11.8	5.8	0.3	18.7	86.8	35.5
		4.8	3.75	68.7	329	656	554	7.1	-	2.9	41.2	45.5	40.0	55.1	77.9	87.4	10.4	6.5	0.1	20.9	78.5	42.0
8" Nozzle, 1/2" Split, Stack Height 10", Modified Bell Mouth Ports, Bottom Hopper Closed, TaNO Burner Port.	FDS-4-J	17.5	6.44	117.3	392	727	614	20.0	-	10.2	66.4	74.4	65.0	90.3	74.7	86.2	11.3	5.1	0.3	19.0	122.4	29.2
		10.3	4.89	89.4	355	696	576	14.1	-	7.5	51.9	58.1	50.6	70.4	76.5	87.4	11.2	6.0	0.0	19.9	97.0	38.1
		4.9	3.47	63.5	328	654	543	7.5	-	3.8	37.2	41.1	36.1	49.6	75.9	85.6	10.2	7.1	0.0	21.6	75.0	48.5
8¼" Nozzle, 1/2" Split, Stack Height 10", Rings ST-200 & LI-11347, TaNO Burner Port.	FDS-5-L	14.7	6.28	114.7	375	706	596	20.0	19.9	10.9	65.6	74.8	64.2	90.3	76.4	88.0	11.4	4.7	0.1	19.0	119.4	26.8
		12.6	5.75	104.9	367	696	584	18.8	18.6	10.5	61.4	69.9	60.1	84.3	78.0	89.4	11.7	4.5	0.0	18.7	107.4	25.7
		10.1	5.14	93.7	352	686	571	16.2	16.0	9.1	55.4	62.8	54.1	75.8	78.5	89.5	11.0	5.2	0.0	19.7	101.5	30.9
		7.3	4.41	80.4	346	669	555	13.8	13.7	8.2	47.9	54.1	46.7	65.3	78.8	89.2	10.9	5.5	0.0	20.0	88.2	33.2
		4.7	3.53	64.6	329	642	535	9.9	9.8	6.1	39.4	44.1	38.2	53.1	79.9	89.8	10.8	5.7	0.0	20.2	71.4	35.1
8¼" Nozzle, 1/2" Split, Stack Height 13½", Rings ST-200 & ST-201, TaNO Burner Port.	FDS-6-P	14.6	6.32	115.4	378	707	611	19.1	18.7	9.8	65.7	75.0	64.3	90.4	76.0	87.5	12.1	4.0	0.2	18.0	113.4	21.5
		11.9	5.62	102.6	361	697	597	16.8	16.6	9.1	59.9	68.0	58.6	82.1	77.7	89.0	11.6	4.7	0.0	18.9	106.0	26.4
		8.2	4.60	84.0	347	676	570	13.2	13.1	7.4	49.8	56.4	48.6	68.1	78.7	89.5	11.1	5.2	0.0	19.7	90.3	30.9
		3.8	3.18	58.1	325	630	532	7.0	6.9	4.1	35.2	39.6	34.1	47.3	79.0	89.0	10.5	5.9	0.0	20.7	65.6	36.7
8" Nozzle, 5/8" x 3" Basket Bridge, Stack Height 13½", Rings ST-200 & ST-201, TaNO Burner Port.	FDS-6-Q	12.4	6.07	110.6	365	700	588	19.3	19.1	10.8	64.8	73.9	63.5	89.3	78.4	89.8	12.4	3.6	0.0	17.8	107.9	19.5
		9.8	5.33	97.1	355	686	571	17.3	17.1	10.2	58.1	66.0	56.8	79.7	79.7	90.9	12.3	3.7	0.0	17.9	95.4	20.1
		7.2	4.64	84.5	340	671	561	12.3	12.2	7.0	50.0	56.6	48.8	68.4	78.5	89.1	11.8	4.6	0.0	18.7	86.6	25.7
		3.8	3.37	61.4	325	631	531	7.0	7.0	4.0	36.6	41.4	35.5	49.6	78.4	88.4	11.0	4.9	0.0	19.7	66.2	28.5
8" Nozzle, 5/8" x 3" Basket Bridge, Stack Height 13½", Rings ST-200 & ST-201, Modified Draft Chutes.	FDS-7-Q	12.5	5.97	108.8	364	700	587	19.2	18.9	10.4	64.8	73.8	63.5	89.2	79.6	91.2	12.5	3.6	0.0	17.7	105.6	19.5
		10.0	5.31	96.8	352	688	574	16.5	16.3	9.3	58.2	65.9	56.9	79.8	80.0	91.1	11.7	4.7	0.0	18.8	100.0	27.2
		7.3	4.66	84.9	341	676	564	11.2	11.1	5.6	50.1	56.6	48.9	68.4	78.2	88.7	11.4	5.0	0.0	19.2	89.6	29.4
		3.9	3.42	62.4	325	636	534	6.8	6.7	3.6	37.3	41.7	36.2	50.1	78.5	87.5	11.0	5.5	0.0	17.4	59.6	33.4
8" Nozzle, 3/4" x 3" Basket Bridge, Stack Height 13½", Rings ST-200 & ST-201, Modified Draft Chutes.	FDS-7-R	13.7	5.95	108.6	369	704	595	18.7	18.5	9.8	63.1	71.8	61.8	86.7	77.4	88.8	11.7	4.3	0.2	18.4	109.7	23.5
		10.8	5.22	95.3	360	700	578	16.1	15.8	8.8	56.6	64.2	55.3	77.8	79.3	90.5	11.5	4.8	0.0	18.8	98.4	28.3
		7.5	4.29	78.2	342	666	556	11.9	11.7	6.7	47.1	53.1	45.9	64.1	79.6	90.0	11.0	5.6	0.0	19.9	85.4	34.3
		3.9	3.10	56.6	324	623	525	7.0	6.9	4.0	34.8	39.1	33.7	46.6	79.9	89.9	10.3	6.7	0.0	21.3	66.0	44.3
8" Nozzle, 5/8" X 2" Basket Bridge, Stack Height 13½", Rings ST-200 and ST-201, Modified Draft Chutes.	FDS-7-S	14.7	5.90	107.5	377	710	596	20.1	19.8	10.7	62.6	71.4	61.2	86.3	77.9	89.6	11.4	4.9	0.0	19.2	113.2	28.6
		12.0	5.32	97.1	363	696	580	17.9	17.6	9.8	57.0	64.8	55.7	78.4	78.3	89.6	10.9	5.6	0.0	20.0	106.7	34.2
		8.4	4.49	81.8	343	676	565	12.6	12.4	6.6	48.1	54.4	46.9	65.8	78.0	88.5	10.4	6.4	0.0	21.0	94.2	41.4
		4.2	3.18	58.1	325	627	526	6.7	6.5	3.4	34.0	38.3	33.0	45.7	76.5	85.9	9.6	7.3	0.1	22.4	71.2	49.7
8" Nozzle, 1/2" x 2" Basket Bridge, Stack Height 13½", Rings ST-200 & ST-201 Modified Draft Chutes	FDS-7-T	13.6	6.02	109.7	374	700	590	19.6	19.3	10.6	65.2	74.3	63.8	89.7	79.3	91.0	12.0	4.0	0.0	18.3	111.1	22.1
		11.9	5.68	103.7	362	701	592	17.1	16.4	9.0	61.2	69.6	59.9	84.3	78.8	90.2	11.8	4.4	0.0	18.6	105.9	25.0
		8.1	4.70	85.7	344	677	568	13.4	13.8	7.5	51.3	57.9	50.1	70.0	79.3	89.9	11.4	5.3	0.0	19.6	92.3	31.9
		3.8	3.37	61.5	323	637	536	6.7	6.5	3.3	36.3	40.6	35.2	48.7	76.9	86.4	10.5	6.0	0.0	20.7	69.8	37.6
8" Nozzle, 3/4" x 4½" Basket Bridge, Stack Height 13½", Rings ST-200 & ST-201, Modified Draft Chutes	FDS-7-U	13.0	6.50	118.4	369	718	609	20.4	20.2	10.3	68.0	77.3	66.6	94.1	77.1	88.9	12.1	4.0	0.1	18.1	117.4	21.8
		10.6	5.76	105.0	356	700	588	17.9	17.6	9.4	61.5	69.6	60.2	84.5	78.1	89.1	11.7	4.5	0.0	18.8	108.0	25.7
		8.0	4.89	89.2	344	679	566	14.6	14.4	8.1	53.2	60.0	52.0	72.7	79.0	89.7	11.3	5.1	0.0	19.4	94.9	30.2
		3.8	3.36	61.1	324	634	531	7.3	7.2	3.9	36.9	41.4	35.8	49.7	78.9	88.6	10.6	6.5	0.0	20.9	70.2	42.5
8" Nozzle, 3/4" x 4½" Basket Bridge, Stack Height 13½", Rings ST-201 & ST-202, Modified Draft Chutes	FDS-8-U	13.1	6.44	117.3	368	720	590	21.7	21.6	11.9	68.7	78.3	67.3	95.4	78.9	90.5	13.0	3.4	0.1	17.1	109.8	18.0
		10.6	5.76	104.9	355	708	577	18.7	18.5	10.5	61.7	69.9	60.4	85.2	78.8	89.8	12.6	3.9	0.0	17.7	101.8	21.6
		8.0	5.00	91.0	345	691	564	15.1	15.0	8.7	54.0	60.8	52.7	74.0	78.8	89.5	12.2	4.5	0.0	18.2	91.2	25.9
		3.9	3.48	63.3	325	642	529	7.7	7.6	4.2	38.0	42.4	36.9	51.1	78.3	87.7	11.1	5.7	0.0	19.9	69.0	35.2
8" Nozzle, 5/8" x 3" Basket Bridge, Stack Height 13½", Rings ST-201 & ST-202, Modified Draft Chutes.	FDS-8-Q	13.2	6.18	112.6	370	716	596	20.6	20.2	11.4	66.4	75.7	65.1	92.0	79.3	90.9	13.3	3.2	0.0	16.9	104.2	17.1
		10.6	5.58	101.7	359	702	581	17.5	17.2	10.0	59.8	67.7	58.5	82.2	78.4	89.5	12.6	3.6	0.0	17.6	98.2	19.5
		8.0	4.76	86.7	342	681	558	14.3	14.1	8.3	52.1	58.7	50.9	71.0	79.4	90.1	12.5	4.2	0.0	17.9	85.0	23.7
		3.9	3.34	60.8	322	635	523	8.5	8.3	4.8	37.3	41.6	36.2	50.0	79.8	89.5	12.0	4.8	0.0	18.6	61.9	28.1

Fig. 4-18

SUMMARY OF DATA

TEST ARRANGEMENT	TEST DESIGNATION	EXHAUST NOZZLE PRESSURE PSIG	FIRING RATE		TEMPERATURES, DEG. FAHRENHEIT			DRAFTS - INCHES, WATER			WATER RATES 1000 lbs. Per Hour		STEAM RATES 1000 lbs. Per Hour		BOILER EFFICIENCIES - %		FLUE GAS COMPOSITION - %			AIR FLOW FROM FLUE GAS ANALYSIS		
			1000 lbs. Per Hr.	BTU per Hr in Millions	EXHAUST STEAM	SUPER-HEATED STEAM	FLUE GAS	INSIDE ARRESTER	BEHIND ARRESTER	FIREBOX	WATER FROM TENDER	WATER TO BOILER	STEAM TO NOZZLE	EQUIV. EVAP. from and at 212 °F.	EXCLUDING FEEDWATER HEATER	INCLUDING FEEDWATER HEATER	CARBON DIOXIDE	OXYGEN	CARBON MONOXIDE	LBS. AIR PER LB. OF OIL	LBS. AIR PER HOUR-THOUSANDS	PERCENT EXCESS AIR
8" Nozzle, 5/8" x 3" Basket Bridge, Stack Height 13½", Rings ST-201 & 202, Modified Chutes, Modified Sheedy Burner	FDS-9-Q	10.7	5.68	103.5	355	701	600	15.9	15.7	8.1	60.1	68.0	58.8	82.5	77.3	88.3	12.6	4.0	0.3	17.4	98.7	21.4
		8.0	4.89	89.1	341	684	584	12.6	12.5	6.6	52.3	58.8	51.1	71.2	77.6	88.0	12.3	4.5	0.0	18.2	88.9	25.9
		8.0	4.86	88.5	343	684	575	12.6	12.2	6.4	51.9	58.4	50.7	70.8	77.5	87.9	12.0	4.7	0.1	18.4	89.4	27.0
		4.0	3.46	63.1	324	648	555	6.8	6.7	2.7	37.5	41.8	36.4	50.5	77.7	87.1	11.5	5.5	0.0	19.3	66.9	33.7
		3.8	3.40	61.9	327	643	540	6.8	6.6	2.3	36.6	40.9	35.5	49.3	77.3	86.6	11.0	6.0	0.0	20.1	68.3	37.9
8" Nozzle, 1/2" x 2" Basket Bridge, Stack Height 13½", Rings ST-201 & 202, Modified Chutes, Modified Sheedy Burner with Air Comm.	FDS-9-T	13.7	6.14	111.9	373	715	613	18.6	18.4	9.3	65.4	74.4	64.0	90.4	78.4	89.7	12.6	3.8	0.0	17.6	108.4	20.9
		8.0	4.71	85.8	343	684	579	12.8	12.8	6.9	51.1	57.3	49.9	69.5	78.6	88.9	12.0	4.6	0.0	18.5	87.0	26.5
		4.1	3.28	60.0	325	639	542	7.1	6.9	3.1	36.8	41.1	35.7	49.4	80.1	89.9	11.3	5.9	0.0	19.7	64.2	32.7
8" Nozzle, 1/2" x 2" Basket Bridge, Stack Height 13½", Rings ST-201 & 202, Modified Chutes, Sheedy Burner	FDS-10-T	14.3	6.47	117.8	374	713	609	20.4	20.2	10.8	67.3	76.9	65.9	93.1	76.7	88.1	12.7	3.7	0.2	17.3	111.9	19.6
		11.5	5.77	105.1	363	704	600	17.4	17.2	9.3	60.8	69.0	59.5	83.7	77.3	88.2	12.5	4.0	0.0	17.8	102.7	22.3
		8.1	4.80	87.4	341	683	578	13.3	13.0	7.1	51.6	57.9	50.4	70.1	77.9	88.2	11.9	4.9	0.0	18.7	89.6	28.9
		3.9	3.42	62.3	325	638	539	7.4	7.2	3.2	37.1	41.3	36.0	49.7	77.4	86.4	11.2	5.7	0.0	19.7	67.5	35.3
8" Nozzle, 1/2" x 2" Basket Bridge, Stack Height 13½", Rings ST-201 & 202, Modified Chutes, S.P. Burner and Burner Port	FDS-11-T	14.3	6.41	116.8	376	724	619	19.2	18.9	9.4	67.4	77.0	66.0	93.7	77.8	89.4	13.0	3.5	0.0	17.2	110.2	19.0
		11.5	5.77	105.1	356	711	602	16.4	16.2	8.4	61.2	69.4	59.9	84.4	77.9	89.1	12.8	3.7	0.0	17.4	100.5	20.3
		8.0	4.79	87.3	343	687	574	14.1	13.9	8.2	51.8	58.2	50.5	70.6	78.5	89.0	12.7	4.0	0.0	17.6	84.3	22.3
		3.8	3.35	61.1	325	645	539	7.7	7.5	3.9	36.8	41.0	35.7	49.4	78.5	88.1	11.8	5.0	0.0	18.8	63.1	29.4
8" Nozzle, 3/4" Split, Stack Height 13½", S.P. Air Ports and Burner	FDS-12-A	18.2	5.50	100.3	342	666	587	25.9	25.7	17.9	59.3	68.0	58.0	80.4	77.8	89.8	11.4	6.2	0.0	19.7	108.5	40.1
		13.4	4.70	85.7	324	654	573	21.5	21.3	15.1	50.9	57.8	49.7	68.6	77.7	88.7	10.6	7.2	0.0	21.1	99.4	50.0
		8.7	3.75	68.3	309	632	552	15.4	15.3	10.9	40.5	45.3	39.4	54.1	76.9	86.4	9.8	8.2	0.0	22.8	85.3	61.4
		5.1	2.87	52.2	296	598	523	10.3	10.2	7.2	31.1	34.6	30.0	40.9	76.0	84.8	9.5	8.6	0.0	23.5	67.3	66.5
8¼" Nozzle, 1/2" Split, Stack Height 13½", S.P. Air Ports and Burner	FDS-12-P	14.5	6.16	112.3	330	658	594	22.7	22.6	15.7	67.0	76.6	65.6	90.7	78.4	90.1	13.4	3.4	0.0	18.4	103.7	18.4
		11.7	5.52	100.6	319	652	580	20.1	19.8	13.9	60.9	69.0	59.6	81.9	79.0	90.3	12.8	4.2	0.0	17.6	97.1	23.8
		8.1	4.64	84.4	304	636	561	15.5	15.3	10.7	51.5	57.8	50.3	68.7	78.9	89.4	12.2	5.0	0.0	18.4	85.6	29.8
		4.0	3.27	59.5	291	593	521	9.7	9.6	7.0	36.9	40.8	35.8	48.2	78.6	87.5	11.8	5.4	0.0	19.0	62.0	33.0
8¼" Nozzle, 1/2" Split, Stack Height 13½", Rings ST-201 & 215A, Modified Chutes. Bottom Hopper Open.	FDS-13-P	14.2	6.36	115.9	325	670	603	16.6	16.3	8.6	67.2	76.7	65.8	91.4	76.5	87.8	12.8	4.2	0.0	17.6	111.9	23.8
		11.6	5.78	105.4	319	664	591	14.6	14.4	7.6	61.5	69.5	60.1	83.1	76.5	87.3	12.4	4.6	0.0	18.1	104.6	26.7
		8.1	4.80	87.5	307	648	574	11.5	11.3	6.3	51.5	57.8	50.3	69.1	76.6	86.7	11.7	5.7	0.0	19.2	92.2	35.6
		4.0	3.43	62.5	289	615	550	6.5	6.4	3.5	37.0	40.9	35.9	48.8	75.8	84.4	11.2	6.1	0.0	19.9	68.3	39.0
8¼" Nozzle, 1/2" Split, Stack Height 13½", Rings ST-201 & 215A, Bottom Hopper Closed, Modified Chutes	FDS-14-P	14.3	6.35	115.8	326	671	605	17.8	17.6	10.2	67.2	76.6	65.8	91.4	76.6	87.9	12.8	4.1	0.1	17.4	110.8	22.8
		11.7	5.74	104.7	318	664	591	15.7	15.5	8.8	61.1	69.2	59.8	82.7	76.6	87.5	12.5	4.7	0.0	18.0	103.5	27.5
		8.1	4.80	87.4	305	646	573	12.7	12.6	7.5	51.6	57.8	50.4	69.1	76.7	86.8	11.8	5.5	0.0	19.0	91.2	33.9
		4.0	3.43	62.5	286	609	541	7.2	7.1	4.3	37.4	41.3	36.3	49.2	76.5	85.2	10.7	7.0	0.0	20.9	71.7	47.8
8¼" Nozzle, 1/2" Split, Stack Height 13½", Rings ST-201 & 202 (raised), Modified Chutes, Bottom Hopper Open.	FDS-15-P	14.3	6.29	114.4	328	671	610	18.0	17.9	10.0	67.2	76.8	65.9	91.4	77.4	89.1	12.6	4.4	0.1	17.7	111.4	24.9
		11.7	5.70	103.9	313	664	602	15.6	15.3	8.7	61.5	69.7	60.1	83.2	77.7	88.7	11.9	5.5	0.0	18.9	107.8	33.9
		8.0	4.71	85.8	304	646	578	12.8	12.6	7.7	51.8	58.0	50.5	69.3	78.4	88.7	11.4	6.1	0.0	19.7	92.7	39.1
		4.0	3.36	61.3	289	608	538	7.4	7.3	4.3	37.0	41.1	35.9	48.9	77.4	86.2	10.8	8.7	0.0	20.7	69.4	44.7
8¼" Nozzle, 1/2" Split, Stack Height 13½", Rings ST-201 & 202 (raised), Modified Chutes, Bottom Hopper Closed	FDS-16-P	14.3	6.29	114.6	325	668	609	18.6	18.3	11.0	67.6	77.3	66.2	92.0	77.9	89.4	12.7	4.4	0.1	17.6	110.8	25.0
		11.6	5.65	102.9	316	661	597	16.3	15.9	9.5	61.2	69.3	59.8	82.6	77.8	88.9	12.2	4.8	0.0	18.4	103.7	28.2
		8.0	4.74	86.4	306	642	575	12.8	12.7	7.8	52.2	58.5	51.0	69.8	78.4	88.6	11.4	6.0	0.0	19.6	93.1	37.2
		4.0	3.35	61.0	288	603	532	8.2	8.2	5.5	37.2	41.3	36.1	49.0	78.0	86.9	11.1	6.3	0.0	20.1	67.3	40.9
8¼" Nozzle, 1/2" Split, Stack Height 13½", Rings ST-201 & 215B, Bottom Hopper Open.	FDS-17-P	14.7	6.48	118.0	330	678	621	17.4	17.1	9.5	67.8	77.4	66.4	92.4	76.0	87.4	12.5	4.3	0.2	17.9	115.7	23.8
		12.1	5.73	104.5	316	666	597	15.3	15.0	8.5	61.8	70.0	60.5	83.6	77.6	88.8	12.0	5.2	0.0	18.7	107.2	31.4
		8.4	4.79	87.2	300	650	580	12.8	12.6	7.5	52.2	58.4	50.9	69.8	77.7	88.0	10.8	6.6	0.0	20.6	98.7	43.7
		4.3	3.40	61.9	293	613	542	7.5	7.4	4.5	37.6	41.5	36.5	49.5	77.6	86.6	10.7	7.0	0.0	20.9	71.1	47.8
8¼" Nozzle, 1/2" Split, Stack Height 13½", Rings ST-201 & 215B, Bottom Hopper Closed	FDS-18-P	14.7	6.37	116.0	327	672	610	18.6	18.4	11.1	68.1	77.8	66.7	92.6	77.4	89.1	12.7	4.1	0.2	17.6	112.1	22.4
		12.2	5.76	104.9	316	662	598	16.8	16.5	10.1	62.0	70.3	60.6	83.7	77.4	88.6	12.0	5.2	0.0	19.0	107.7	31.4
		8.4	4.77	87.0	304	646	578	13.0	12.7	7.9	52.2	58.5	50.9	69.8	77.8	88.2	11.0	6.6	0.0	20.4	97.2	43.8
		4.3	3.40	61.9	293	607	538	8.5	8.3	5.5	37.6	41.5	36.5	49.3	77.3	86.2	10.6	7.0	0.0	21.0	71.5	47.7
8¼" Nozzle, 1/2" Split, Stack Height 13½", Rings ST-201 & 215B, Plus 5½" Flues, Dampers Weighted	FDS-19-P	14.7	6.22	113.3	330	669	600	18.1	17.9	10.3	67.8	77.3	66.4	92.0	78.7	90.4	12.6	4.5	0.0	17.9	111.1	26.0
		12.1	5.67	103.3	316	661	590	16.7	16.5	9.8	61.9	70.1	60.5	83.5	78.4	89.6	12.2	4.9	0.0	18.4	104.2	29.0
		8.5	4.78	87.0	304	645	570	14.1	13.9	8.8	52.4	58.9	51.3	70.2	78.3	88.8	11.7	5.6	0.0	19.2	91.5	35.8
		4.3	3.38	61.7	294	606	533	9.2	9.0	6.2	38.1	42.1	37.0	50.1	78.8	88.0	11.0	6.4	0.0	20.3	68.6	41.8
8¼" Nozzle, 1/2" Split, Stack Height 13½", Rings ST-201 & 202 (Raised & Forward)	FDS-20-P	14.7	6.25	113.9	330	671	603	19.0	18.8	11.7	68.2	77.7	66.8	92.6	78.9	90.6	13.3	3.4	0.0	16.9	105.7	18.4
		12.1	5.68	103.6	318	661	587	17.7	17.6	11.2	62.0	70.1	60.7	83.6	78.3	89.4	12.9	4.0	0.0	17.4	99.0	22.4
		8.5	4.70	85.6	310	645	567	14.8	14.7	9.7	52.2	58.5	50.9	69.9	79.2	89.5	12.0	5.2	0.0	18.7	87.8	31.4
		4.3	3.35	61.1	291	602	529	9.5	9.5	6.4	37.5	41.6	36.4	49.3	78.3	87.2	11.3	6.0	0.0	19.8	66.2	38.1
8¼" Nozzle, 1/2" Split, Stack Height 13½", Rings ST-201, Side Opening 5-3/4" x 32½"	FDS-21-P	14.7	6.43	117.1	327	672	609	16.2	16.0	8.4	67.8	77.5	66.4	92.2	76.4	88.0	12.4	4.3	0.3	17.6	113.4	23.5
		12.1	5.77	105.1	322	676	596	14.1	13.8	7.0	61.5	69.6	60.2	83.3	76.9	88.1	11.9	5.1	0.2	18.5	106.7	29.8
		8.5	4.80	87.5	304	656	575	12.3	12.1	6.8	52.4	58.6	51.1	70.1	77.7	88.2	11.4	5.9	0.0	19.6	94.1	37.2
		4.3	3.43	62.4	291	618	544	7.0	6.8	3.9	37.7	41.6	36.6	49.7	77.3	86.0	10.8	6.8	0.0	21.3	72.9	45.7

FIG. 4-19

SUMMARY OF DATA

TEST ARRANGEMENT	TEST DESIGNATION	EXHAUST NOZZLE PRESSURE PSIG	FIRING RATE: 1000 lbs. Per Hr.	FIRING RATE: BTU per Hr in Millions	TEMPERATURES, DEG. FAHRENHEIT: EXHAUST STEAM	TEMPERATURES: SUPER-HEATED STEAM	TEMPERATURES: FLUE GAS	DRAFTS - INCHES, WATER: INSIDE ARRESTER	DRAFTS: BEHIND ARRESTER	DRAFTS: FIREBOX	WATER RATES 1000 lbs. Per Hour: WATER FROM TENDER	WATER RATES: WATER TO BOILER	STEAM RATES 1000 lbs. Per Hour: STEAM TO NOZZLE	STEAM RATES: EQUIV. EVAP. from and at 212 °F.	BOILER EFFICIENCIES - %: EXCLUDING FEEDWATER HEATER	BOILER EFFICIENCIES: INCLUDING FEEDWATER HEATER	FLUE GAS COMPOSITION - %: CARBON DIOXIDE	FLUE GAS COMPOSITION: OXYGEN	FLUE GAS COMPOSITION: CARBON MONOXIDE	AIR FLOW FROM FLUE GAS ANALYSIS: LBS. AIR PER LB. OF OIL	AIR FLOW: LBS. AIR PER HOUR-THOUSANDS	AIR FLOW: PERCENT EXCESS AIR
8¼" Nozzle, 1/2" Split, Stack Height 13½", Rings ST-201 & Four ST-258, Positions 2 & 3 RS & 3&4 LS, Burner Port Reduced to 7½"x8". Hopper Closed.	FDS-22-P	14.7	6.22	113.3	329	665	601	18.6	18.2	11.0	67.8	77.3	66.4	91.9	78.7	90.4	12.2	4.8	0.0	18.3	113.8	28.2
		12.1	5.63	102.6	319	656	586	16.3	16.1	9.8	61.8	69.9	60.5	83.1	78.6	89.9	11.8	5.3	0.0	18.9	106.4	32.1
		8.8	4.82	87.8	303	644	570	13.7	13.4	8.4	53.1	59.6	51.9	76.5	78.5	88.9	11.2	6.1	0.0	19.8	95.4	38.9
		4.3	3.45	62.9	293	608	544	8.4	8.3	5.5	38.0	42.1	36.9	54.0	77.3	86.1	10.1	7.5	0.0	21.9	75.6	52.9
8¼" Nozzle, ½" Split, Stack Height 13½", Rings ST-201 & Six ST-258 Positions 2,3,4 R&L, Burner Port Reduced to 5½"x8". Hopper Closed.	FDS-23-P	14.7	6.26	114.1	331	668	602	20.3	20.0	12.9	67.0	76.5	65.6	91.0	77.4	89.0	13.3	3.5	0.0	16.9	105.7	19.0
		12.2	5.61	102.1	318	658	585	18.3	18.0	11.8	60.8	69.0	59.5	88.5	78.0	89.2	12.7	4.2	0.0	17.6	98.8	23.8
		8.6	4.68	85.3	305	642	568	14.1	13.9	9.2	51.4	57.9	50.2	74.2	78.3	89.0	12.2	5.0	0.0	18.4	85.9	29.8
		4.3	3.40	61.9	287	609	537	8.3	8.3	5.5	37.8	42.0	36.6	50.0	78.4	87.7	11.1	6.3	0.0	20.1	68.1	40.9
8" Nozzle, 5/8" x 3" Basket Bridge, Stack Height 13½", Rings ST-201 & 4 ST-258, Positions 3&4 R&L. Burner Port reduced to 6½"x8". Hopper closed.	FDS-24-Q	12.7	6.13	111.6	320	664	612	18.2	18.0	10.7	66.9	76.2	65.6	91.7	78.9	90.4	13.5	3.3	0.0	16.7	102.2	17.7
		10.2	5.43	98.8	312	649	585	15.7	15.5	9.4	60.3	68.1	59.0	79.5	79.6	90.8	13.0	3.9	0.0	17.3	93.6	21.7
		7.7	4.66	84.8	300	631	565	13.3	13.2	8.5	52.7	59.2	51.5	68.9	80.4	91.1	12.8	4.2	0.0	17.5	81.7	23.9
		4.2	3.48	63.3	292	604	542	7.9	7.8	5.0	39.1	43.5	38.0	52.1	79.2	88.7	11.8	5.5	0.0	19.0	65.9	33.8
8" Nozzle, 5/8" x 3" Basket Bridge, Stack Height 13½", Rings ST-201 & 4 ST-259 Positions 3&4 R&L. Burner port reduced to 6½"x8". Hopper closed. Burner tilted up 4°.	FDS-25-Q	12.8	6.02	109.6	318	655	593	17.0	16.4	9.2	66.0	74.9	64.6	89.0	78.8	90.1	12.5	4.5	0.0	17.9	107.8	26.0
		11.0	5.65	102.8	310	648	582	15.8	15.5	8.8	62.4	70.5	61.0	83.8	79.1	90.2	12.5	4.5	0.0	17.9	101.1	26.0
		7.7	4.65	84.6	301	631	565	11.2	10.9	6.3	51.4	57.6	50.2	66.5	78.5	88.8	11.8	5.4	0.0	18.9	87.8	33.0
		4.1	3.45	62.9	294	601	534	7.3	7.1	4.3	38.4	42.7	37.3	49.1	78.1	87.3	11.1	6.2	0.0	20.0	69.1	39.9
8" Nozzle, 5/8" x 3" Basket Bridge, Stack Height 13½". Rings ST-201 & 4 ST-259 Positions 3&4 R&L with Draft Chutes. Burner Port reduced to 6½"x8". Hopper closed. Burner Tilted up 4°.	FDS-26-Q	12.9	6.32	115.2	321	675	602	16.4	-	8.7	67.3	76.6	66.0	91.7	77.2	88.4	13.2	3.4	0.0	17.0	107.2	18.4
		10.2	5.55	101.1	312	666	587	13.7	-	7.3	60.3	68.2	59.0	81.7	78.5	89.4	12.9	3.9	0.0	17.4	95.3	21.7
		7.5	4.70	85.7	300	643	566	11.1	-	6.1	51.8	58.1	50.5	69.5	78.5	88.8	12.3	4.9	0.0	18.2	85.7	29.0
		4.0	3.39	61.8	293	608	535	7.6	-	4.7	38.5	42.8	37.4	50.9	79.9	89.3	11.9	5.2	0.0	18.7	63.6	31.3
8" Nozzle, 5/8" x 3" Basket Bridge, 13½" Stack Height, Rings ST-201 & 4 ST-259 Positions 3&4 R&L, with Draft Chutes, Burner Port Reduced to 6½"x8", Hopper Closed. Burner tilted up 1°.	FDS-27-Q	12.6	6.01	110.7	322	677	600	17.0	-	9.2	66.8	75.9	65.4	91.1	79.8	91.3	13.1	3.8	0.0	17.2	103.0	21.0
		10.8	5.58	102.7	312	667	592	15.5	-	8.7	63.0	71.3	61.6	85.4	80.6	91.9	12.5	4.4	0.0	17.9	99.7	25.2
		7.5	4.67	84.1	300	645	574	11.3	-	6.5	52.3	58.7	51.0	70.2	79.1	89.6	12.1	4.9	0.0	18.4	86.1	29.0
		3.9	3.41	62.9	292	613	545	6.8	-	3.8	38.3	42.6	37.2	50.9	78.5	87.9	11.2	6.0	0.0	19.8	67.5	38.1
8" Nozzle, 5/8" x 3" Basket Bridge 13½" Stack Height, Rings ST-201 & 4 ST-260 Positions 3&4 R&L, Draft Chutes, Burner Port Reduced to 6½" x 8", Hopper Closed.	FDS-28-Q	12.7	6.09	111.7	320	673	591	17.5	17.3	9.5	67.2	76.5	65.8	91.6	79.5	91.1	13.5	3.2	0.0	16.7	101.4	17.2
		10.2	5.38	98.7	311	660	585	15.3	15.2	8.7	59.6	67.4	58.3	80.6	79.3	90.4	12.9	3.9	0.0	17.4	93.3	21.7
		7.5	4.62	84.9	304	646	569	12.4	12.3	7.2	51.6	58.0	50.4	69.4	79.3	89.6	12.5	4.4	0.0	17.9	82.3	25.2
		4.0	3.41	62.5	291	610	535	7.5	7.3	4.5	38.5	43.0	37.4	51.2	79.4	89.0	11.8	5.3	0.0	18.9	64.3	32.1
8" Nozzle, 5/8" x 3" Basket Bridge 13½" Stack Height, Rings ST-201 & 2 ST-258 Position 2 R&L & 2 ST-260 position 3 R&L with Draft Chutes. Burner port reduced to 5¼"x8". Hopper closed. Burner tilted up 1°.	FDS-29-Q	12.6	6.15	112.7	321	670	595	17.1	16.9	9.4	67.3	76.5	66.0	91.5	78.8	90.2	12.5	4.6	0.0	17.9	110.3	26.8
		10.2	5.50	100.8	311	656	579	14.3	14.0	7.8	60.1	67.8	58.7	81.1	78.0	88.8	12.0	5.2	0.0	18.6	102.5	31.4
		7.5	4.69	85.9	303	641	565	11.4	11.4	6.6	51.6	58.1	50.4	69.2	78.2	88.7	11.6	5.6	0.0	19.2	90.0	34.6
8" Nozzle T&NO 3/4" Cross Split 13½" Stack Height, T&NO Burner Port, Bottom Hopper, Firedoor and Firepan.	FDT-1-B	18.0	6.18	113.8	339	681	608	20.7	20.7	12.5	68.1	78.5	66.8	92.7	79.5	92.1	12.5	4.5	0.0	17.9	110.6	26.0
		13.8	5.43	100.1	326	669	596	17.3	17.1	10.6	59.8	68.1	58.5	80.7	78.2	90.2	11.6	5.6	0.0	19.2	104.3	34.6
		8.6	4.32	79.5	311	643	563	13.0	13.0	8.4	48.0	54.1	46.8	64.4	78.6	89.2	11.0	6.3	0.0	20.2	87.0	40.8
		5.2	3.41	62.8	296	624	547	8.0	7.9	5.0	38.8	43.3	37.7	51.1	79.9	89.6	10.7	6.9	0.0	20.8	70.9	46.8
8¼" Nozzle, SP½" Cross Split, 13½" Stack Height, T&NO Burner Port, Bottom Hopper & Sand Ejector. No spark arrester. T&NO Firepan.	FDT-1-V	15.1	6.42	117.6	327	666	614	18.6	18.6	11.1	68.5	78.2	67.1	92.9	76.7	88.1	13.5	3.1	0.3	16.3	104.8	15.6
		14.7	6.44	117.8	329	664	606	19.4	19.5	11.7	68.5	78.6	67.2	93.1	76.7	88.4	13.0	3.2	0.2	16.9	108.5	16.4
		12.4	5.81	106.4	316	655	596	16.6	16.7	9.9	62.8	71.2	61.4	84.6	77.2	88.2	13.0	3.8	0.1	17.1	99.8	20.7
		8.2	4.75	86.9	306	641	571	12.8	12.8	7.7	52.4	58.7	51.2	70.1	78.3	88.5	12.0	5.2	0.0	18.6	88.4	31.4
		4.2	3.41	62.4	290	607	540	7.0	7.0	4.1	37.6	41.7	36.5	49.6	77.2	86.0	10.6	6.9	0.0	20.9	71.3	46.6
		4.0	3.45	63.1	293	609	543	6.6	6.6	3.7	37.6	42.1	36.5	50.1	77.0	86.5	10.8	6.7	0.0	20.6	70.9	44.7
8¼" Nozzle, SP½" Cross Split 13½" Stack Height, T&NO Burner Port & Bottom Hopper with Rounded Approaches to both. T&NO Sand Ejector. No Spark Arrester. T&NO Firepan.	FDT-2-V	15.1	6.40	117.1	330	661	602	21.4	21.5	13.7	68.3	78.3	67.0	92.6	76.8	88.6	13.6	3.1	0.0	16.5	105.9	16.5
		12.1	5.78	105.7	317	651	582	20.1	20.1	13.7	62.4	71.0	61.1	84.1	77.2	88.5	13.2	3.7	0.0	17.0	98.5	20.4
		8.4	4.79	87.6	306	629	558	18.6	18.5	13.5	52.4	59.0	51.2	69.8	77.3	87.9	13.1	3.9	0.0	17.2	82.3	21.8
		4.0	3.40	62.9	289	592	534	9.1	9.1	6.8	37.5	41.8	36.4	49.3	77.0	86.2	12.1	5.2	0.0	18.5	63.0	31.4

FIG. 4-20

SUMMARY OF DATA

TEST ARRANGEMENT	TEST DESIGNATION	EXHAUST NOZZLE PRESSURE PSIG	FIRING RATE: 1000 lbs. Per Hr.	FIRING RATE: BTU per Hr in Millions	TEMPERATURES, DEG. FAHRENHEIT: EXHAUST STEAM	TEMPERATURES: SUPER-HEATED STEAM	TEMPERATURES: FLUE GAS	DRAFTS - INCHES, WATER: INSIDE ARRESTER	DRAFTS: BEHIND ARRESTER	DRAFTS: FIREBOX	WATER RATES 1000 lbs. Per Hour: WATER FROM TENDER	WATER RATES: WATER TO BOILER	STEAM RATES 1000 lbs. Per Hour: STEAM TO NOZZLE	STEAM RATES: EQUIV. EVAP. from and at 212 °F.	BOILER EFFICIENCIES - %: EXCLUDING FEEDWATER HEATER	BOILER EFFICIENCIES: INCLUDING FEEDWATER HEATER	FLUE GAS COMPOSITION - %: CARBON DIOXIDE	FLUE GAS COMPOSITION: OXYGEN	FLUE GAS COMPOSITION: CARBON MONOXIDE	AIR FLOW FROM FLUE GAS ANALYSIS: LBS. AIR PER LB. OF OIL	AIR FLOW: LBS. AIR PER HOUR-THOUSANDS	AIR FLOW: PERCENT EXCESS AIR
8"Nozzle 5/8"x2"Basket Bridge 13½" Stack Height.No sand ejector or Spark Arrester,Rounded Approaches to Burner Port & Front of Bottom Hopper. TBNO?	FDT-2-W	15.2	6.19	113.0	328	666	600	20.6	21.5	13.4	66.3	75.9	64.9	89.9	78.9	91.2	12.7	4.4	0.0	17.6	109.2	25.3
		12.3	5.56	101.8	315	656	583	18.7	18.7	12.2	60.4	68.9	59.1	81.7	77.9	89.5	12.2	5.0	0.0	18.4	102.4	29.8
		9.5	4.83	88.2	306	641	563	16.6	16.6	11.3	53.1	60.2	51.8	71.3	78.5	89.8	12.3	4.9	0.0	18.2	88.1	29.0
		6.8	4.06	74.2	297	605	541	14.5	14.5	10.5	45.8	51.4	44.6	60.6	79.3	89.8	12.8	5.0	0.0	18.6	74.8	29.8
		4.2	3.32	60.5	288	587	535	8.5	8.5	6.0	36.9	41.2	35.8	48.5	77.9	87.4	11.7	5.6	0.0	19.1	63.3	34.7
8½"Nozzle,SP½"Cross Split with Bottom of Split 1/8" below Nozzle ,13½"Stack Height,TBNO Firepan Without Spark Arrester or Sand Ejector.	FDT-2-X	14.0	6.38	116.4	323	650	597	19.5	19.6	12.0	67.1	76.7	65.8	90.6	75.5	86.9	13.4	3.4	0.0	16.8	107.1	18.4
		11.1	5.60	102.1	313	642	583	16.9	17.0	10.8	60.4	68.4	58.0	81.0	77.0	88.1	13.1	3.8	0.0	17.2	96.0	21.0
		7.5	4.60	83.9	304	627	566	13.4	13.3	8.9	50.3	56.6	49.1	66.5	76.9	87.4	12.7	4.4	0.0	17.7	81.4	25.3
		4.1	3.39	61.8	290	591	534	9.9	10.0	7.3	38.0	42.5	36.9	50.1	78.8	88.2	12.7	4.2	0.0	17.6	59.7	23.8
8"Nozzle,½"x3"Basket Bridge, 13½"Stack Height,no Spark Arrester nor Sand Ejector, 4 Battelle Steam Air Jets.TBNO Firepan.	FDT-3-T	11.3	6.08	110.7	319	664	596	18.9	18.7	12.4	66.5	75.8	65.2	90.4	79.2	90.8	14.4	2.2	0.0	15.7	95.4	11.2
		9.1	5.49	100.1	309	653	581	13.7	13.6	7.7	60.7	68.6	59.3	81.9	79.4	90.5	13.2	3.8	0.0	17.1	93.7	21.1
		6.4	4.66	84.9	301	636	569	10.8	10.7	6.7	51.6	58.0	50.3	69.1	78.9	89.6	12.4	4.6	0.0	18.0	84.0	26.7
		4.1	3.74	68.2	289	620	549	7.0	6.8	4.1	41.9	46.8	40.7	55.9	79.5	89.4	-	-	-	-	-	-
8"Nozzle,½"x3"Basket Bridge, 13½"Stack Height.No Spark Arrester nor Sand Ejector.TBNO Firepan,8"x24"Burner Port,10, 5½" Flues. (5 each side)	FDT-4-T	11.4	6.36	116.6	318	669	606	14.3	14.1	6.7	66.7	76.0	65.4	90.8	75.6	86.6	12.2	4.7	0.1	18.1	115.4	27.0
		9.2	5.62	102.9	306	658	591	12.2	12.0	6.2	59.8	67.7	58.5	81.1	76.4	87.2	12.8	4.1	0.1	17.4	97.7	22.7
		6.5	4.68	85.6	298	634	567	9.8	9.8	5.4	50.8	57.2	49.6	68.1	77.1	87.5	12.2	4.8	0.1	18.2	85.0	27.9
		3.8	3.59	65.8	291	598	537	6.9	6.9	4.3	39.6	44.3	38.5	52.5	77.4	87.1	11.9	5.3	0.0	18.8	67.4	32.2
8½"Nozzle,SP½"Cross Split 1/8" into Nozzle,13½" Stack Height.No Spark Arrester nor Sand Ejector. TBNO Firepan with Dutch Oven,STLSW 3" Burner, Front Port of Bottom Hopper Closed,Rear Port Open. 16-2" ID Flues RS & 16 LS.	FDT-5-X	14.8	6.37	119.7	328	672	608	17.8	17.5	9.8	68.8	79.8	67.4	94.6	76.7	89.2	11.7	4.7	0.0	18.8	123.6	27.2
		14.6	6.33	119.1	324	665	626	15.4	15.2	7.2	68.1	78.7	66.8	94.0	76.6	88.8	11.7	4.7	0.0	18.8	122.9	27.2
		11.1	5.58	101.8	315	676	606	13.0	12.9	6.1	59.1	67.5	57.8	80.9	77.2	88.7	11.5	5.6	0.0	19.4	108.1	34.6
		11.0	5.63	102.5	316	660	602	14.4	14.1	8.0	59.7	68.3	58.4	81.2	76.8	88.5	12.0	4.9	0.0	18.5	104.0	26.5
		8.0	4.38	83.5	305	649	597	9.8	9.7	5.4	49.4	56.1	48.2	66.9	77.6	88.6	12.2	4.2	0.0	18.2	83.2	23.6
		4.1	3.39	61.8	291	619	556	5.6	5.4	2.8	36.5	41.1	35.4	49.0	76.8	86.6	12.0	6.5	0.0	19.2	65.0	43.5
8½"Nozzle,SP½"Cross Split 1/8" into Nozzle,13½"Stack Height. No Spark Arrester nor Sand Ejector.TBNO Firepan with Dutch Oven Shortened 9" & Edges Re Rounded.STLSW 3"Burner,16-2" ID Flues,RS & 16 LS,Side Openings.Front port of Bottom Hopper closed,Rear port Open.	FDT-6-X	14.9	6.51	118.7	330	681	625	16.4	16.2	8.2	68.8	79.4	67.4	94.7	77.4	89.7	13.0	3.7	0.2	17.0	110.6	19.6
		11.0	5.57	101.6	314	665	602	13.4	13.3	6.9	59.3	67.6	58.0	80.7	77.1	88.5	12.6	4.4	0.1	17.7	98.5	25.3
		7.8	4.65	84.7	304	647	587	10.1	10.0	5.3	49.8	56.4	48.6	67.3	77.1	87.9	12.1	5.2	0.0	18.5	86.1	31.4
		4.2	3.39	61.8	292	615	546	6.4	6.4	3.6	37.1	41.7	36.0	49.6	77.9	87.8	11.5	6.0	0.0	19.5	66.0	38.3
8½"Nozzle,SP½"Cross Split(SP Set)13½"Stack Height,with Sand Ejector,without Spark Arrester TBNO Firepan with 28"x20"Arch Brick Dutch Oven 40" Long. STLSW 3" Burner.16-2" ID Flues RS & 16-LS,Side Openings,Front Port of Bottom Hopper Closed.	FDT-7-Y	15.0	6.50	118.5	332	667	611	18.8	18.3	10.5	69.0	79.6	67.6	94.4	77.3	89.7	12.3	3.9	0.0	17.9	116.3	21.4
		14.5	6.51	118.8	325	667	611	18.3	17.9	10.2	68.1	78.8	66.7	93.4	76.3	88.7	13.2	3.6	0.0	17.0	110.8	19.7
		11.0	5.65	103.0	311	655	593	15.4	15.1	8.8	60.4	69.4	59.1	82.5	77.7	89.4	12.6	4.5	0.0	17.8	100.6	26.8
		7.6	4.66	84.9	304	633	580	14.3	14.1	9.7	50.4	57.1	49.2	67.7	77.3	88.2	12.2	5.0	0.0	18.4	85.5	29.8
		4.2	3.53	64.5	292	606	541	8.2	8.1	5.4	39.1	43.9	38.0	52.1	78.5	88.3	11.4	5.6	0.0	19.4	68.6	34.5
		4.1	3.42	62.3	293	604	546	8.0	7.9	5.3	37.4	41.9	36.2	49.7	77.3	87.1	11.6	5.9	0.0	19.3	66.0	37.4
8½"Nozzle,5/8"x2"Basket Bridge 13½"StackHeight with Sand Ejector,without Spark Arrester. TBNO Firepan with 28"x20"Arch Brick Dutch Oven 40"Long.SP 3½"Burner,16-2"ID Flues RS & 16 LS,Side Openings,Front Port of Bottom Hopper Closed.	FDT-8-Z	14.0	6.56	119.7	325	670	612	18.1	18.1	10.3	69.7	80.3	68.3	95.4	77.3	89.4	12.7	4.2	0.0	17.6	115.6	23.8
		10.8	5.67	103.6	317	649	592	15.6	15.6	9.5	61.1	69.7	59.8	82.6	77.4	88.8	12.6	4.6	0.0	17.8	101.2	26.8
		7.4	4.74	86.5	299	622	572	11.8	11.7	7.4	51.1	57.8	49.9	68.2	76.5	87.3	12.3	4.9	0.0	18.2	86.3	29.0
		4.0	3.50	63.8	290	600	541	7.6	7.5	5.0	36.4	40.9	35.3	48.3	73.5	82.8	11.8	5.5	0.0	19.0	66.2	33.0
8½"Nozzle,SP½"Cross Split 1/8" into Nozzle,13½"Stack Height. No Spark Arrester,with Sand Ejector.TBNO Firepan with 28" x20"Arch Brick Dutch Oven 40" long,SP 3½"Burner,16-2"ID Flues RS, & 16-LS,Side Openings.Front Port Bottom Hopper Closed.Bottom Opening 6"x19½".	FDT-9-AA	15.1	6.44	117.4	325	676	609	18.3	18.2	10.3	68.6	79.0	67.2	94.0	77.7	89.9	12.6	4.3	0.0	17.8	114.2	24.4
		10.9	5.47	99.8	317	656	590	15.2	15.1	8.9	58.9	67.1	57.6	79.8	77.6	89.0	12.0	5.3	0.0	18.7	102.1	32.2
		7.6	4.46	81.4	305	637	568	12.3	12.2	7.8	49.1	55.4	47.9	65.9	78.5	89.3	11.5	6.0	0.0	19.5	86.9	38.3
		4.1	3.21	58.5	294	598	534	7.6	7.6	5.1	35.9	40.3	34.8	47.6	79.0	89.1	10.8	6.8	0.0	20.6	66.1	45.8

FIG 4-21

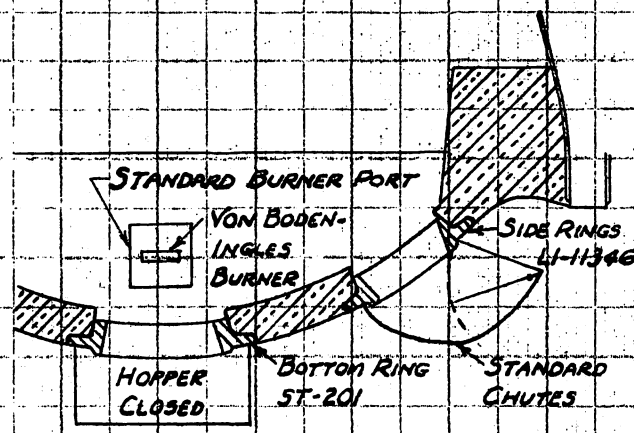

SP FIREPAN AND DRAFT ARRGT.
SERIES FDS 12-P

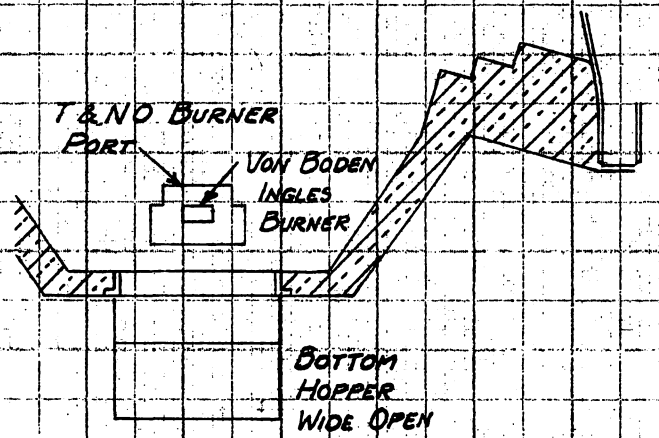

T&NO FIREPAN AND DRAFT ARRGT.
SERIES FDT 1-V

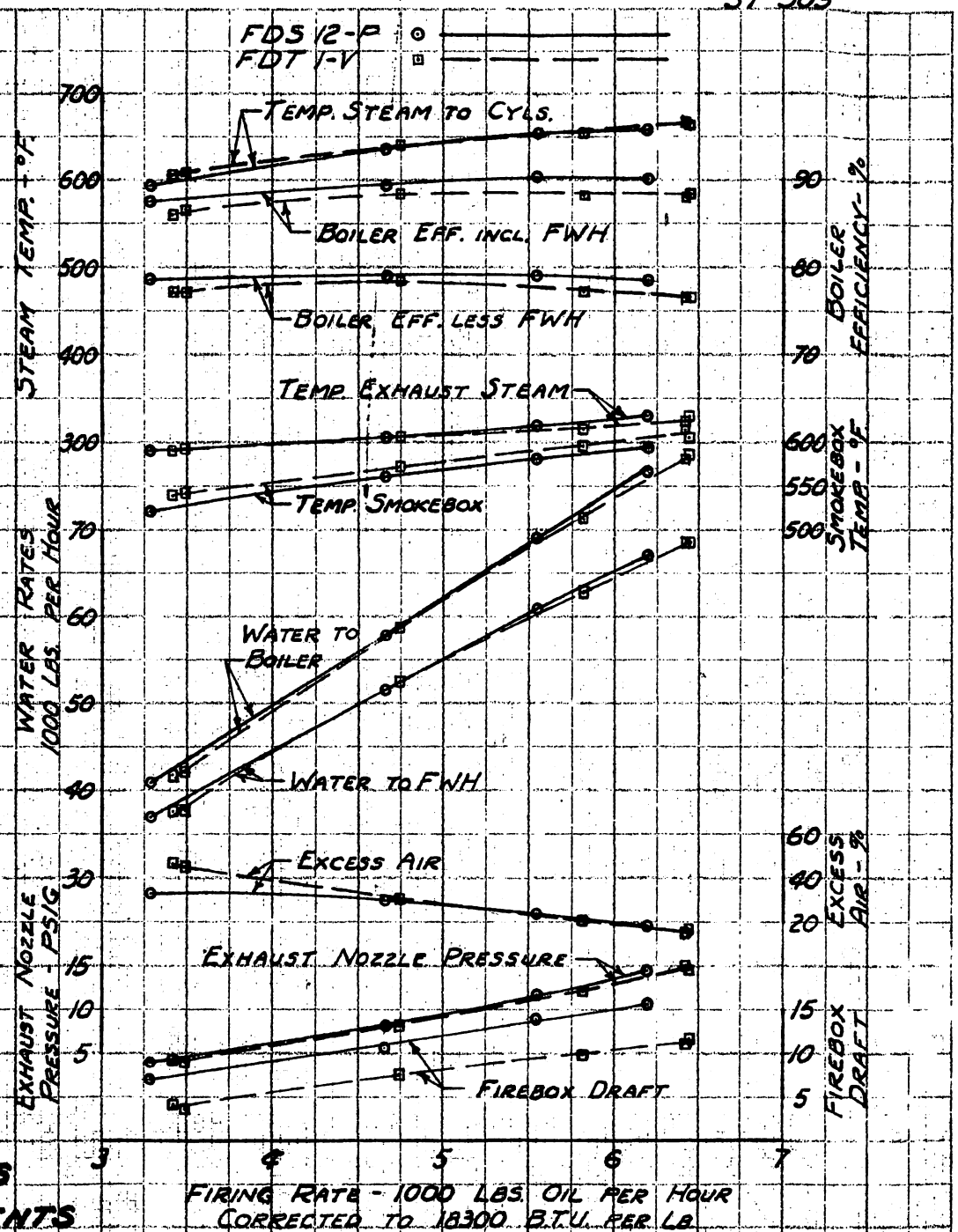

SP VS T&NO STANDARD FIREPANS WITH SIMILAR SMOKEBOX ARRANGEMENTS

STANDING TEST PLANT, SACRAMENTO

STANDING TEST ENGINE 4401

JUNE 15, 1949

FIG. 4-22

ST-307

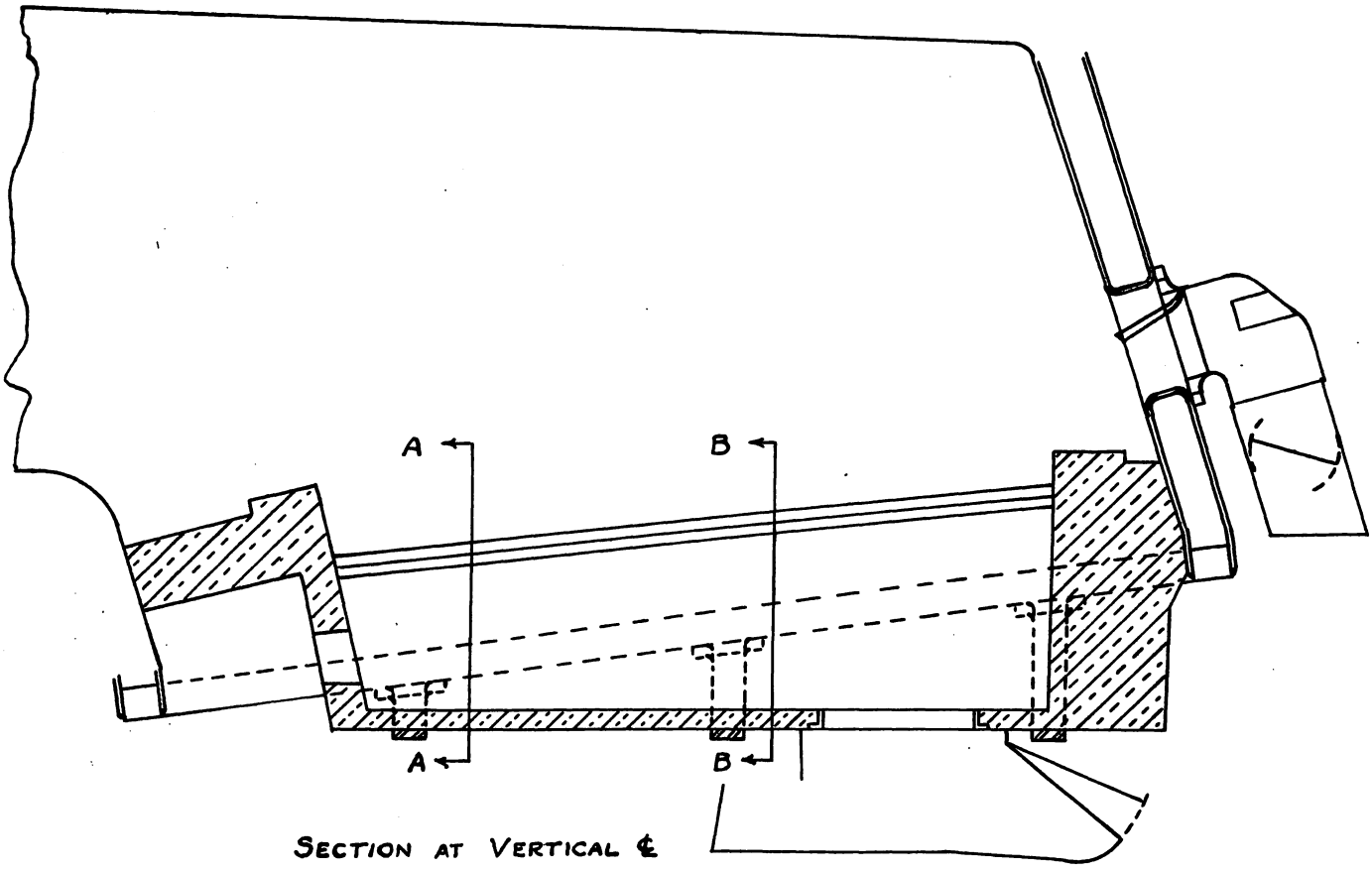

SECTION AT VERTICAL ℄

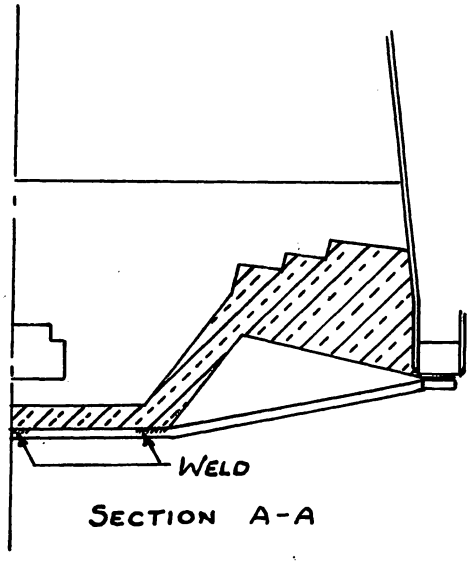

SECTION A-A

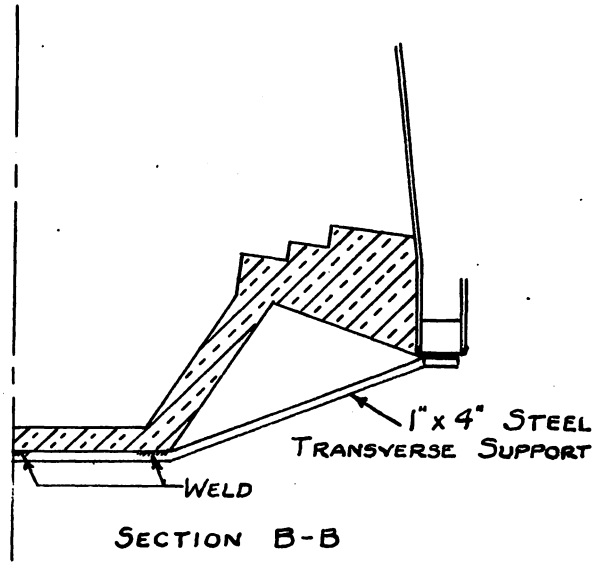

SECTION B-B

T&NO STANDARD FIREPAN SHOWING FIREPAN SUPPORTS

STANDING TEST PLANT, SACRAMENTO — JUNE 15, 1949

FIG. 4-23

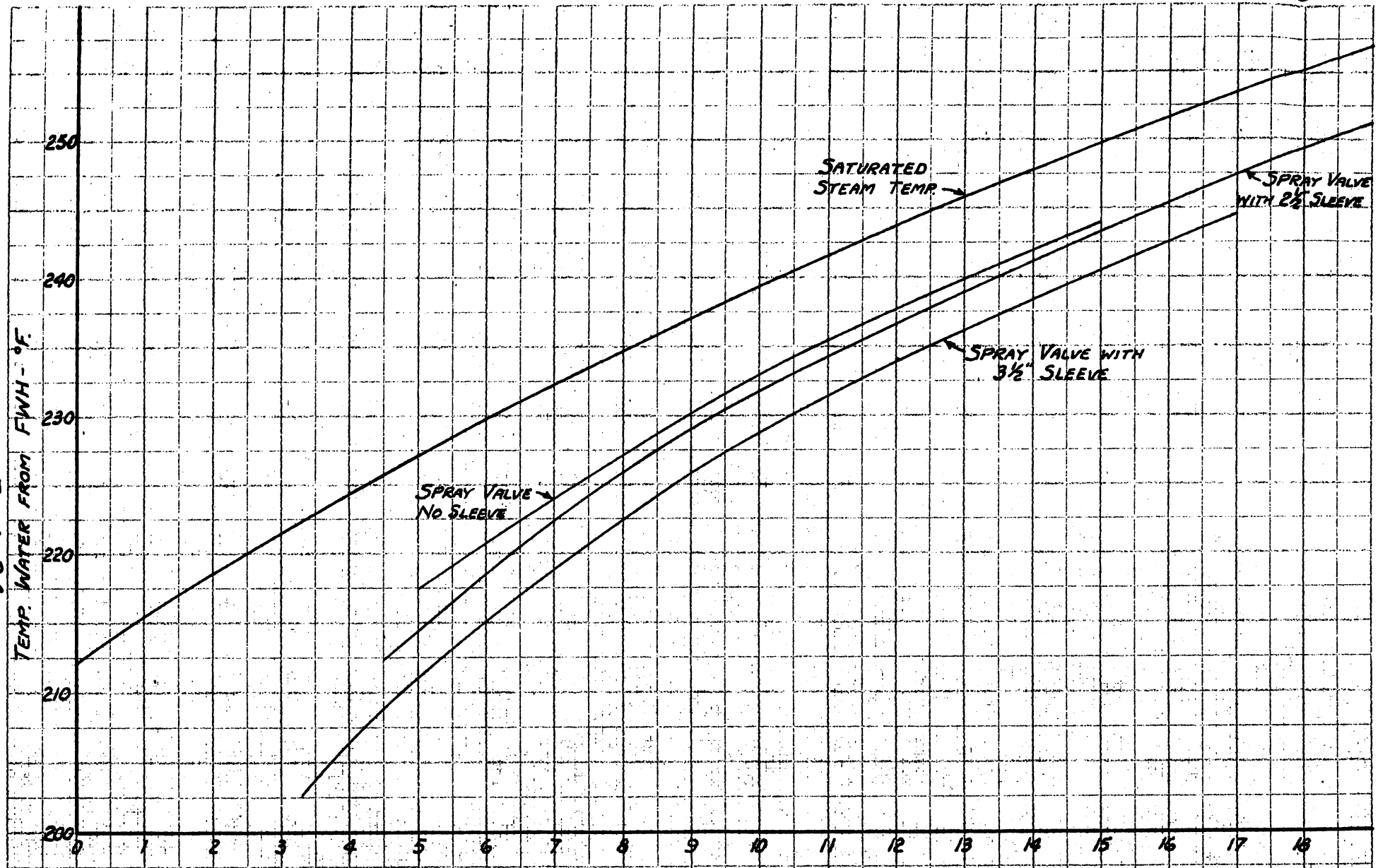

FIG. 4-24

TEMPERATURE OF HOT WATER FROM HEATER VERSUS PRESSURE FOR VARIOUS SPRAY VALVE SLEEVE LENGTHS

STANDING TEST PLANT, SACRAMENTO

JUNE 15, 1949

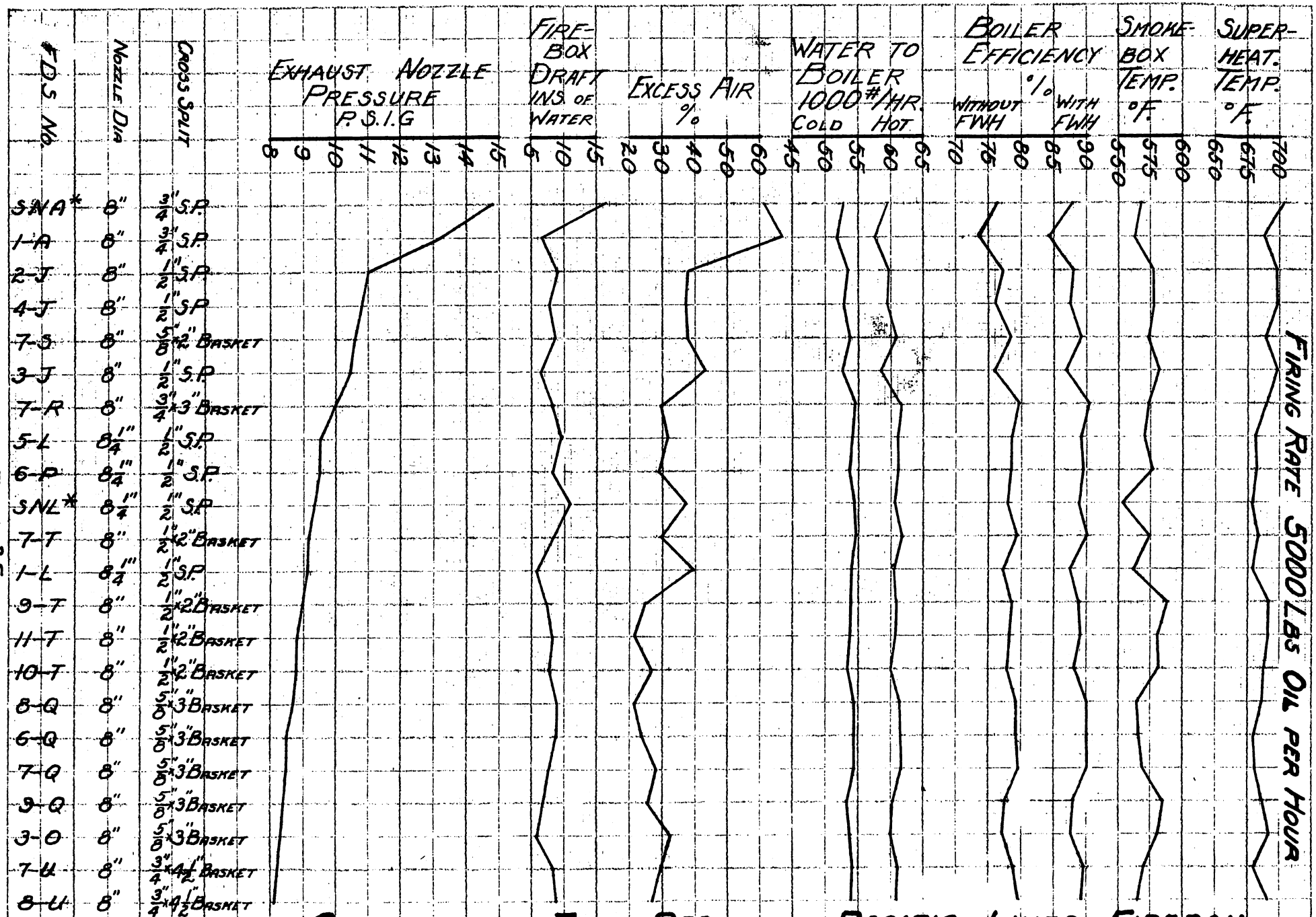

Fig. 4-25

Comparative Test Results - Pacific Lines Firepan

* From SN Series in Report ST-2

Type E Superheater Unit Return Bends 24" from Back Flue Sheet

Standing Test Plant, Sacramento — Standing Test — Engine 4401 — June 15, 1949

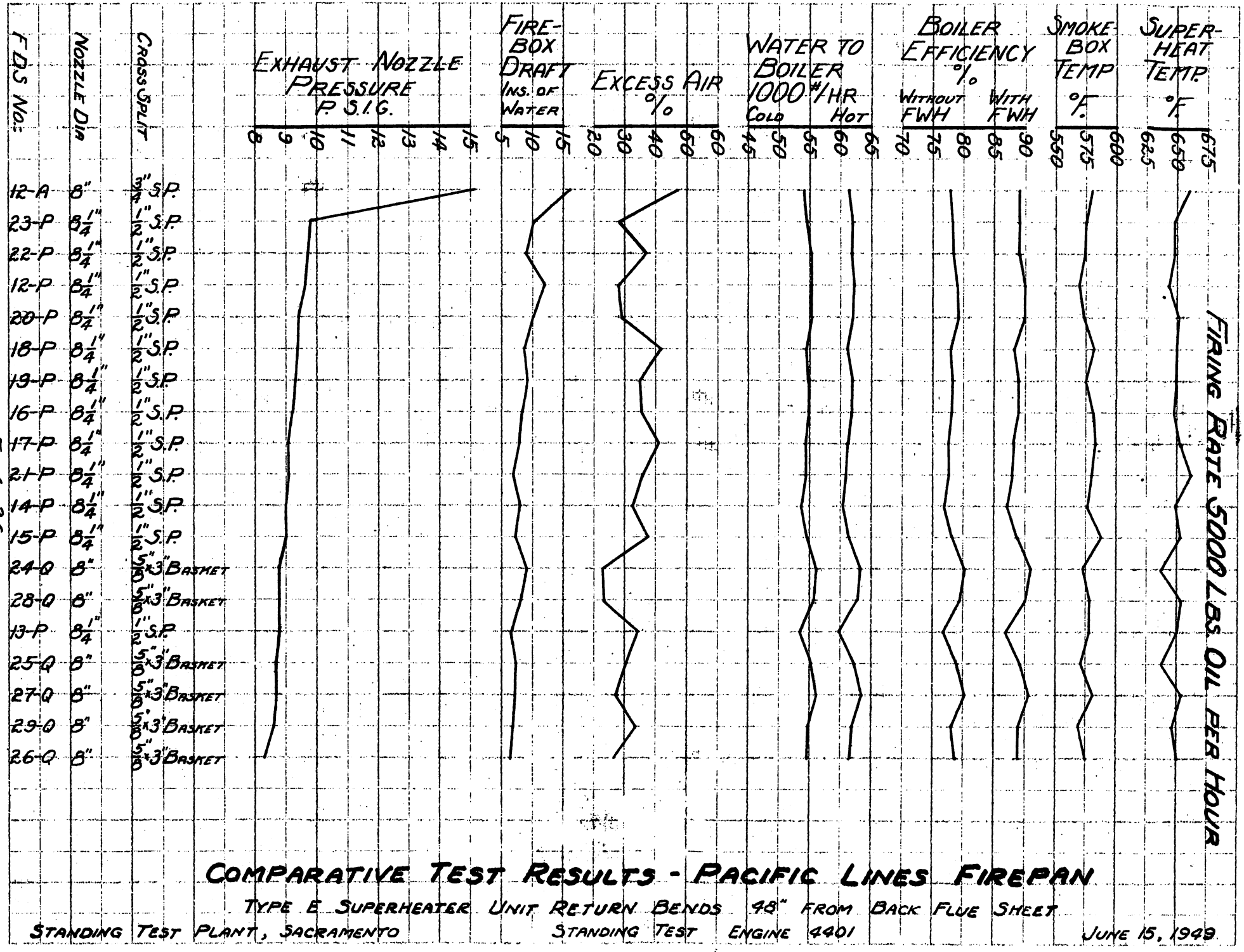

Fig. 4-26

Comparative Test Results - Pacific Lines Firepan

Type E Superheater Unit Return Bends 48" from Back Flue Sheet

Standing Test Plant, Sacramento — Standing Test Engine 4401 — June 15, 1949

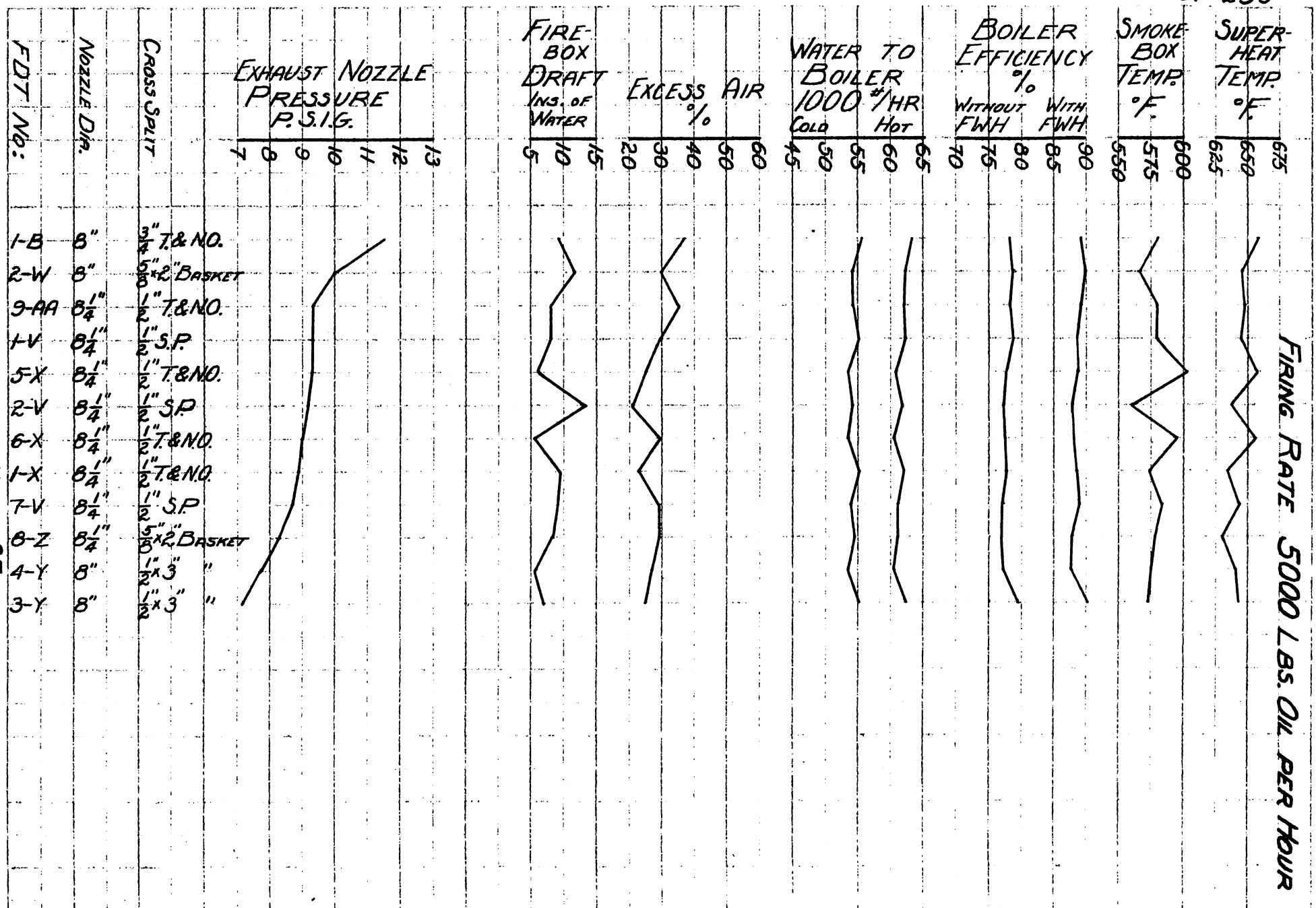

Fig. 4-27

Comparative Test Results - T&NO Lines Firepan

Type E Superheater Unit Return Bends 48" from Back Flue Sheet

Standing Test Plant, Sacramento — Standing Test Engine 4401 — June 15, 1949

ST-304

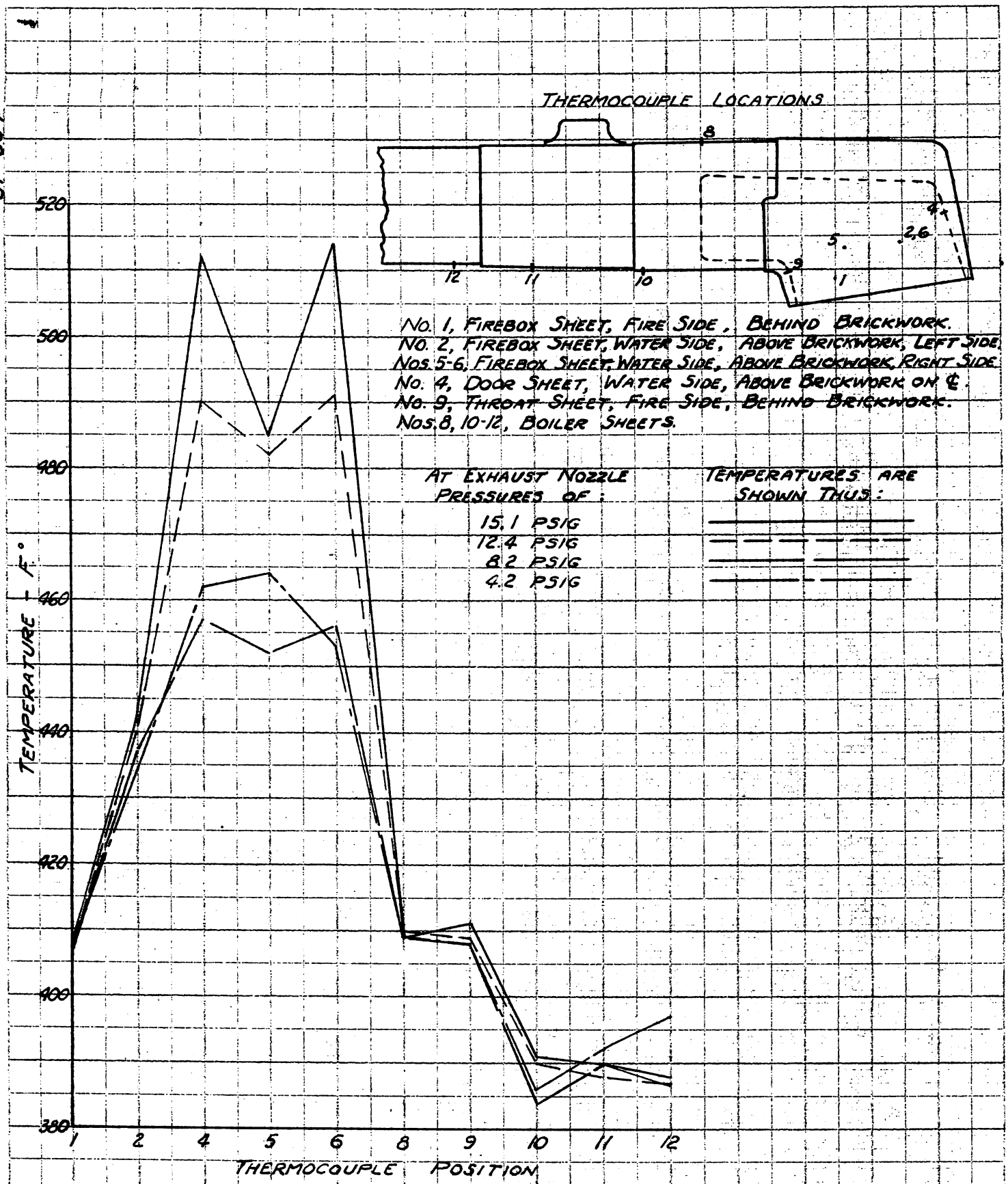

FIREBOX AND BOILER SHEET TEMPERATURES
SERIES FDT I-V

STANDING TEST PLANT, SACRAMENTO

JUNE 15, 1949

FIG. 4-28

ST-305

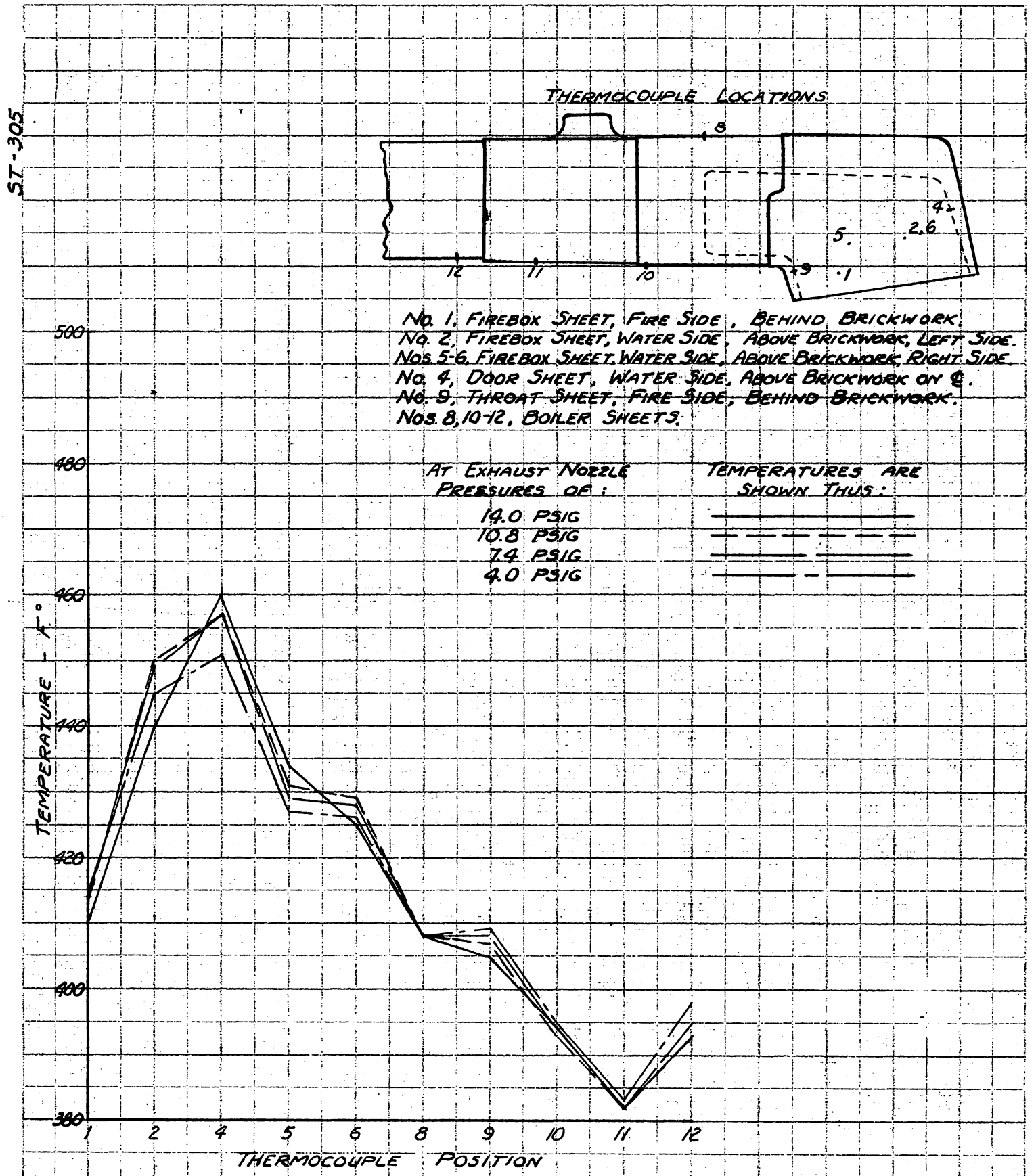

FIREBOX AND BOILER SHEET TEMPERATURES
SERIES FDT 8-Z

STANDING TEST PLANT, SACRAMENTO

JUNE 15, 1949

FIG. 4-29

ST-219

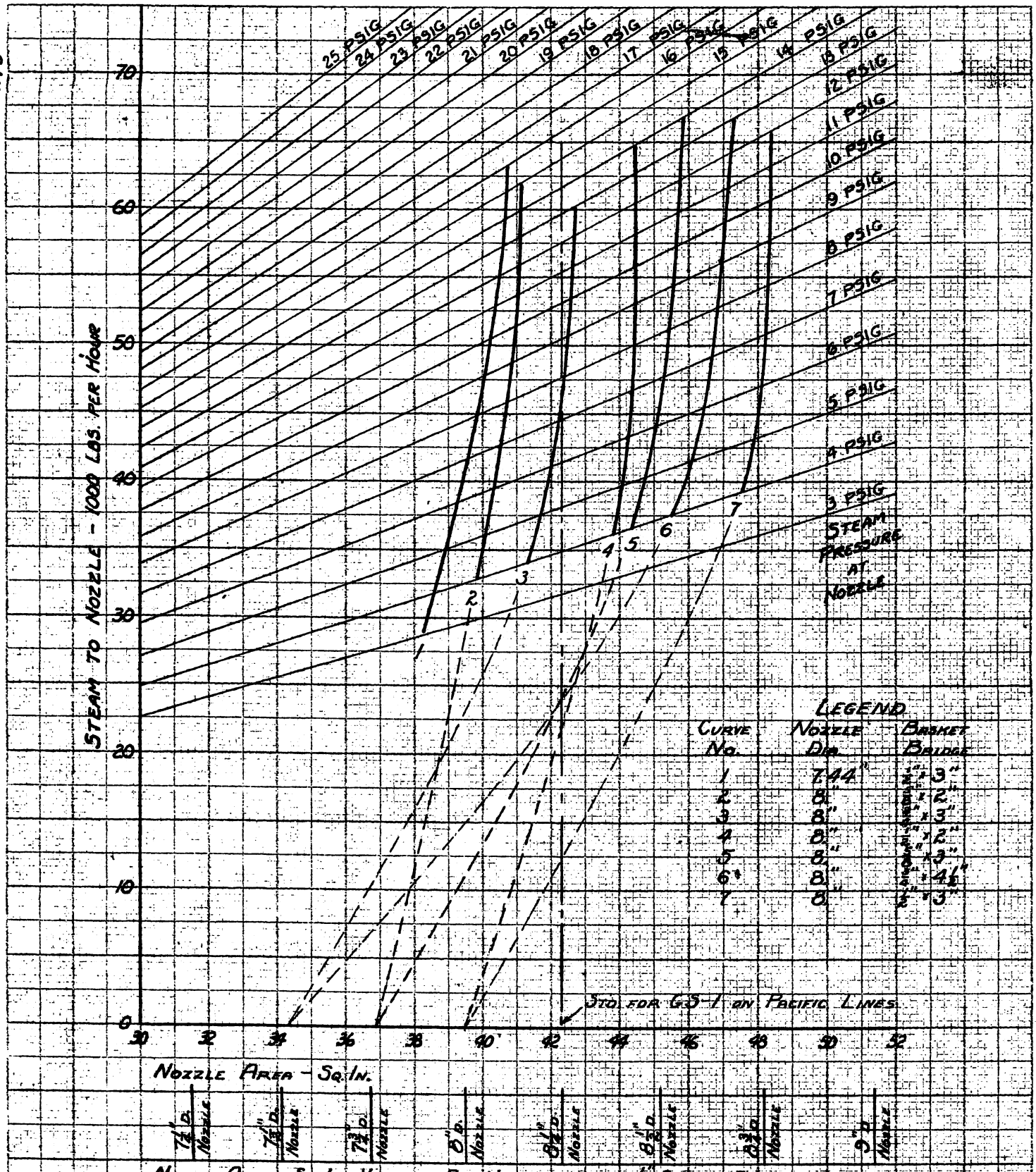

NOZZLE AREA - SQ. IN., VARIOUS DIA. NOZZLES WITH 1/2" CROSS SPLIT

APPARENT AREAS OF NOZZLES EQUIPPED WITH BASKET BRIDGE CROSS SPLIT

BASED ON EXHAUST STEAM FLOW FOR G.S-1's EQUIPPED WITH TYPE E SUPERHEATER WITH UNIT ENDS 2.4" FROM BACK FLUE SHEET

STANDING TEST

ENGINE 4401

STANDING TEST PLANT, SACRAMENTO

JUNE 15, 1949

FIG. 4-30

ST - 308

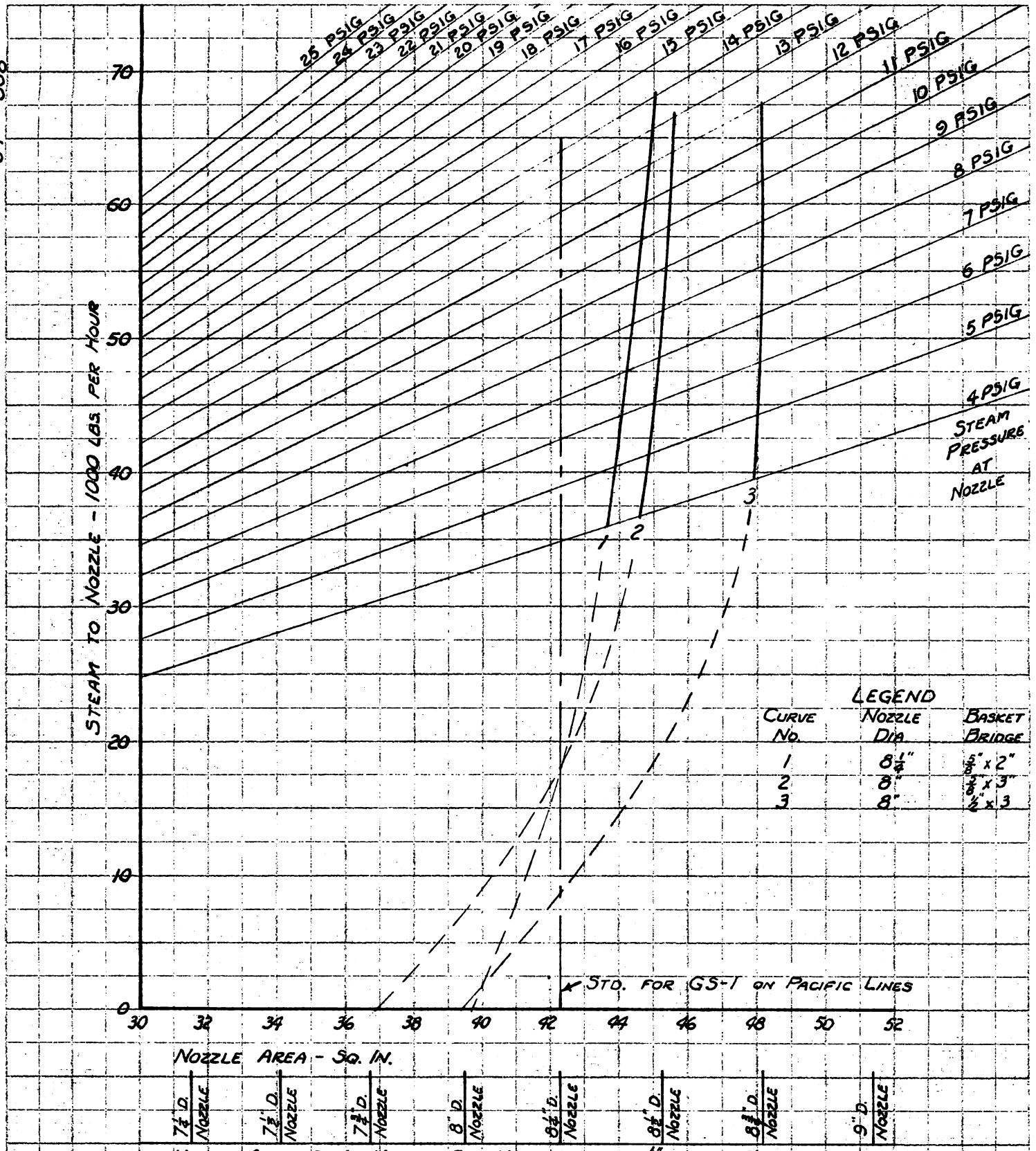

NOZZLE AREA - SQ. IN., VARIOUS DIA. NOZZLES WITH 1/2" CROSS SPLIT

APPARENT AREAS OF NOZZLES EQUIPPED WITH BASKET BRIDGE CROSS SPLIT

BASED ON EXHAUST STEAM FLOW FOR GS-1'S EQUIPPED WITH TYPE E SUPERHEATER WITH UNIT ENDS 48" FROM BACK FLUE SHEET

STANDING TEST — ENGINE 4401

STANDING TEST PLANT, SACRAMENTO — JUNE 15, 1949

FIG. 4-31

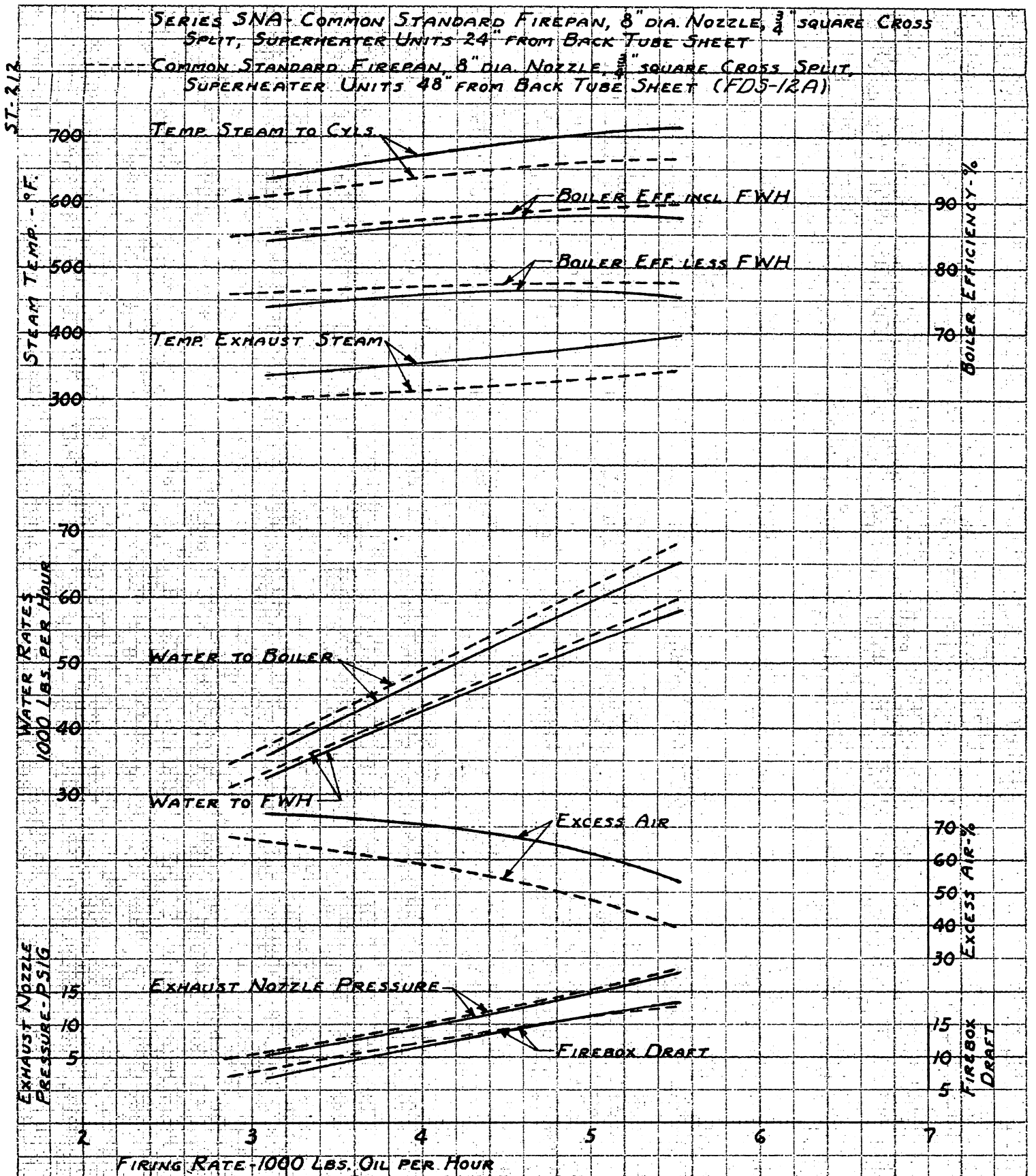

MISCELLANEOUS CURVES VS FIRING RATE

FOR SUPERHEATER UNITS 24" AND 48" FROM BACK TUBE SHEET

STANDING TEST ENGINE 4401

STANDING TEST PLANT, SACRAMENTO

JUNE 15, 1949

FIG. 4-32

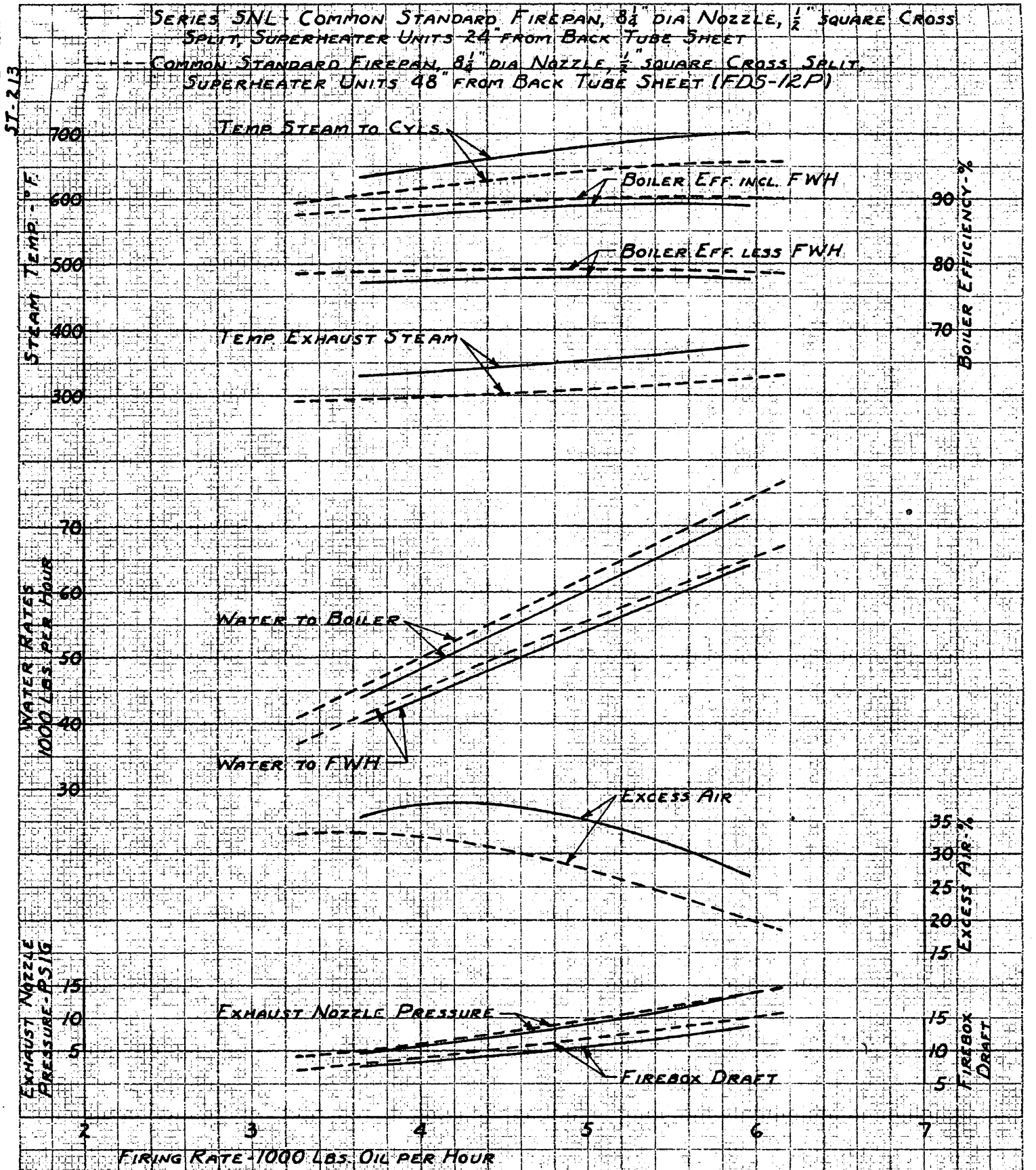

MISCELLANEOUS CURVES VS FIRING RATE

FOR SUPERHEATER UNITS 24" AND 48" FROM BACK TUBE SHEET

STANDING TEST ENGINE 4401

STANDING TEST PLANT, SACRAMENTO. JUNE 15, 1949

FIG. 4-33

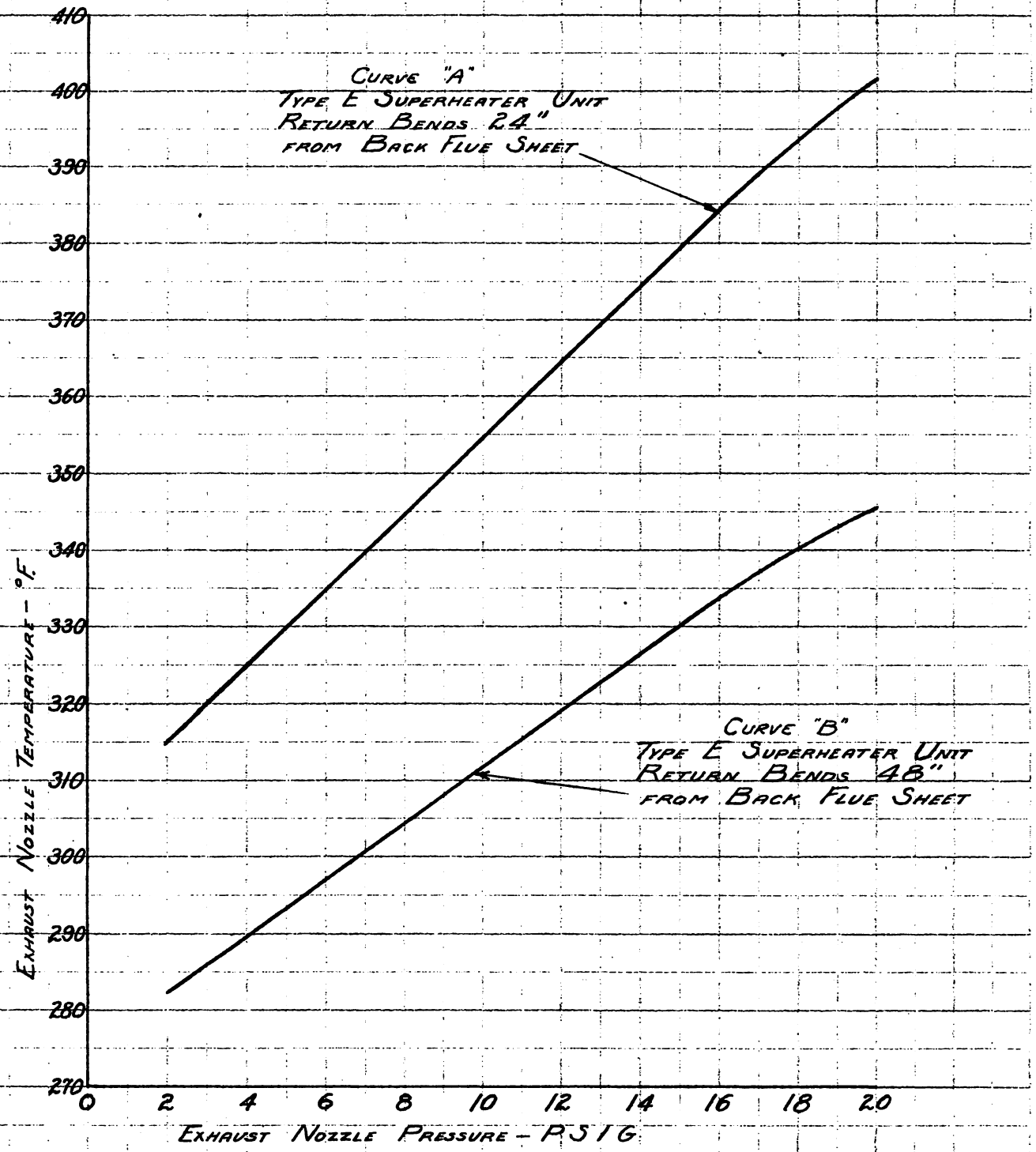

EXHAUST NOZZLE TEMPERATURE VS EXHAUST NOZZLE PRESSURE

STANDING TEST ENGINE 4401

STANDING TEST PLANT, SACRAMENTO

JUNE 15, 1949

FIG. 4-34

51-302

ST-200

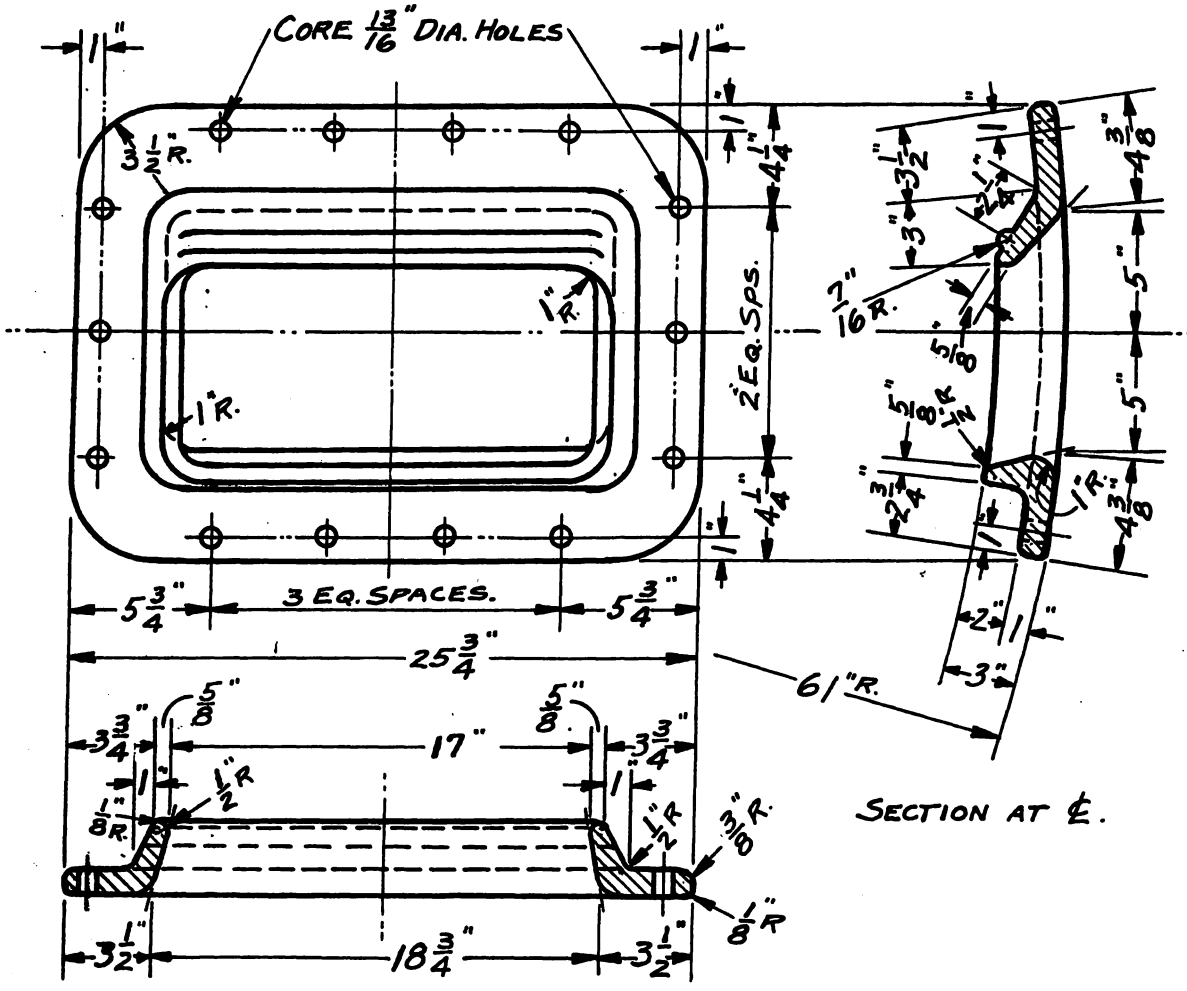

SECTION AT ℄.

SIDE RING No. ST-200
MATL: CAST IRON
2 PER LOCO.

FIRE PAN DRAFT SIDE RING

STANDING TEST ENGINE 4401

STANDING TEST PLANT, SACRAMENTO. JUNE 15, 1949

FIG. 4-35

ST-201

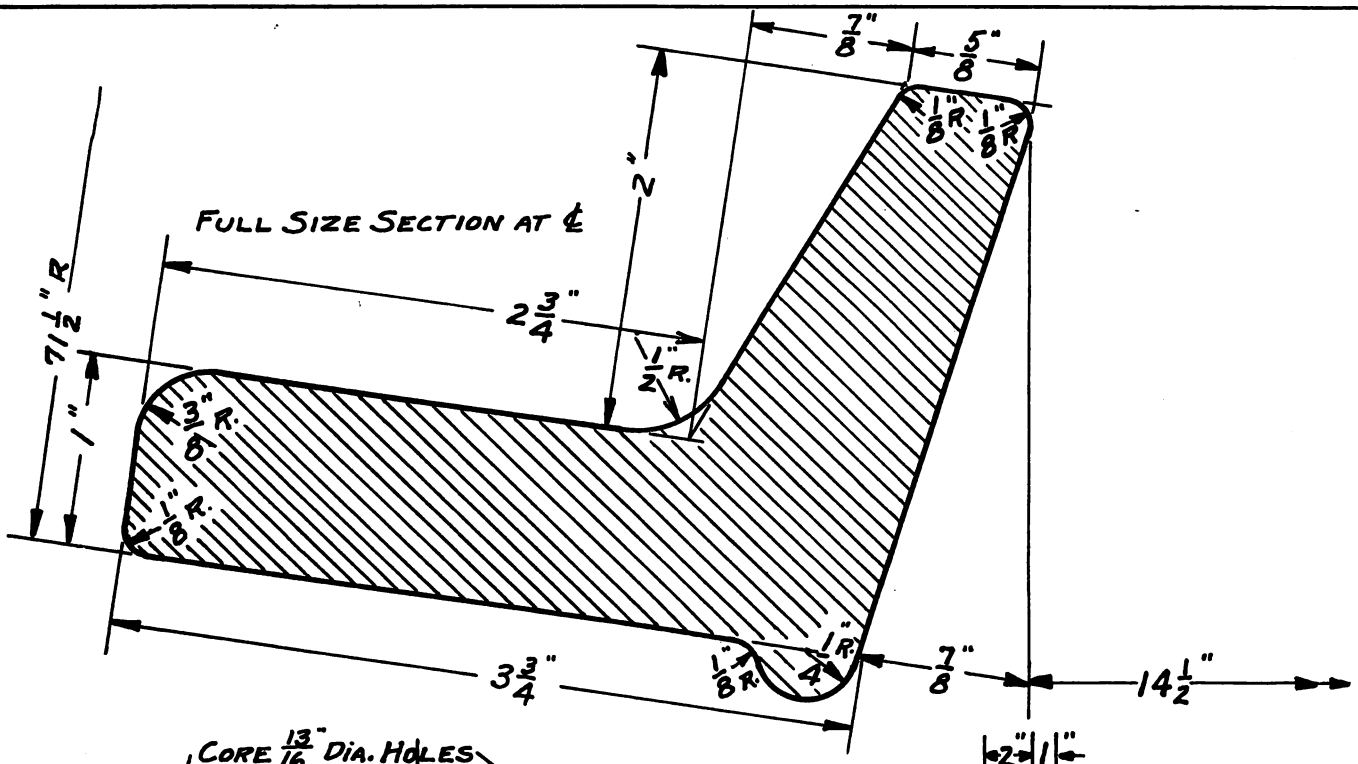

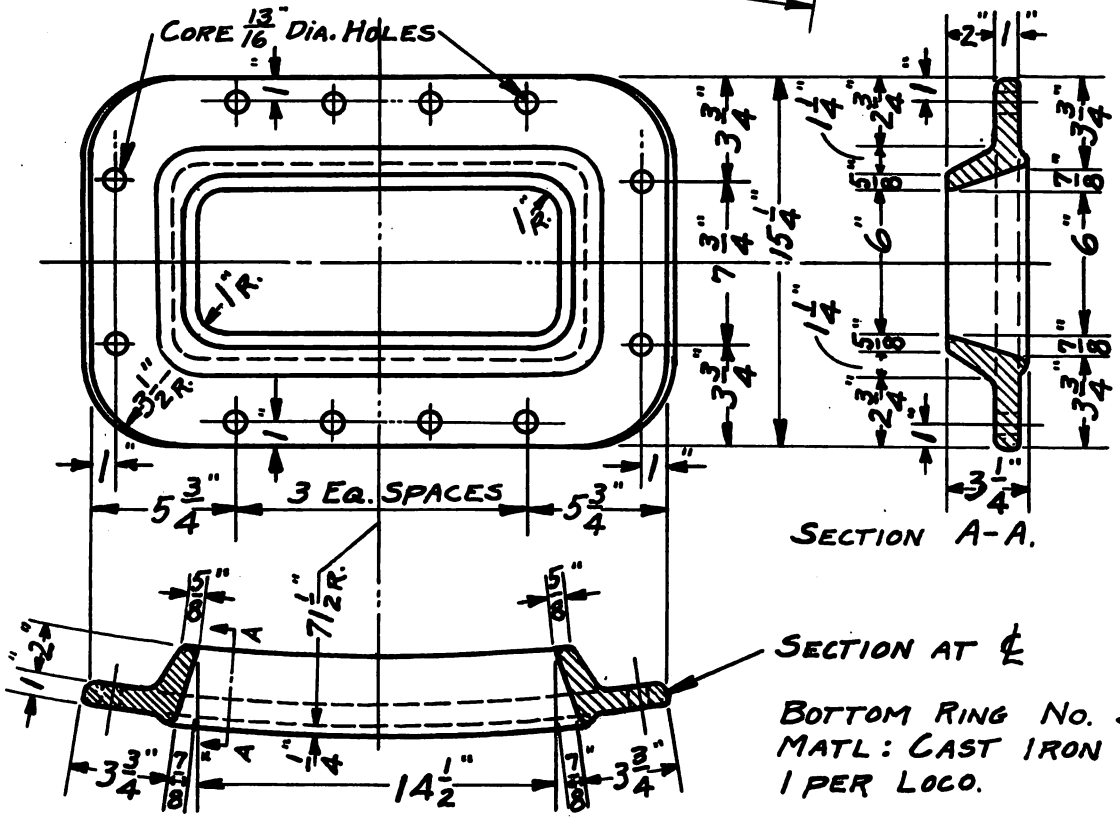

BOTTOM RING NO. ST-201
MATL: CAST IRON
1 PER LOCO.

FIRE PAN DRAFT BOTTOM RING

STANDING TEST — ENGINE 4401

STANDING TEST PLANT, SACRAMENTO. — JUNE 15, 1949

FIG. 4-36

ST-202

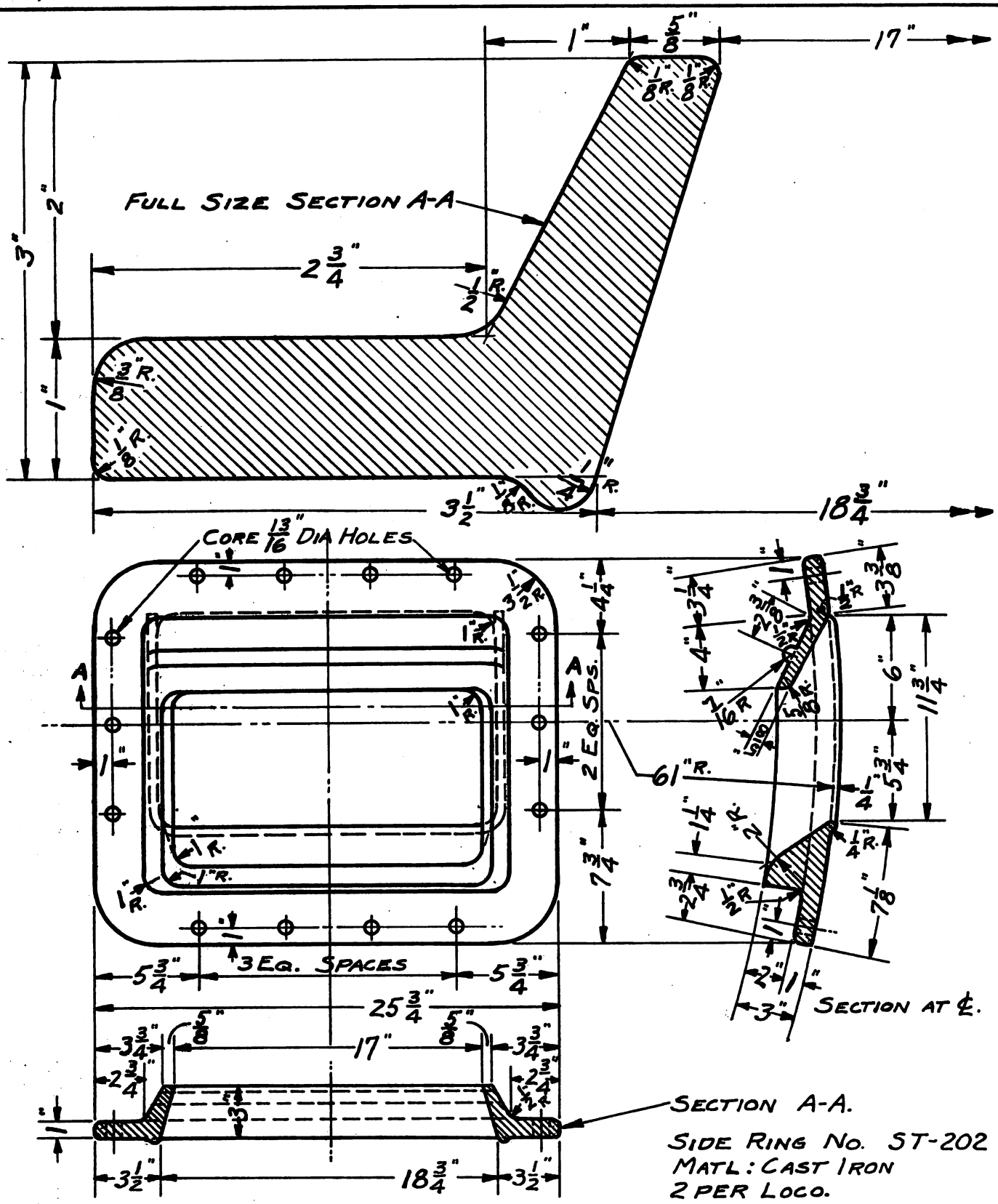

FIRE PAN DRAFT SIDE RING

STANDING TEST ENGINE 4401

STANDING TEST PLANT, SACRAMENTO. JUNE 15, 1949

FIG. 4-37

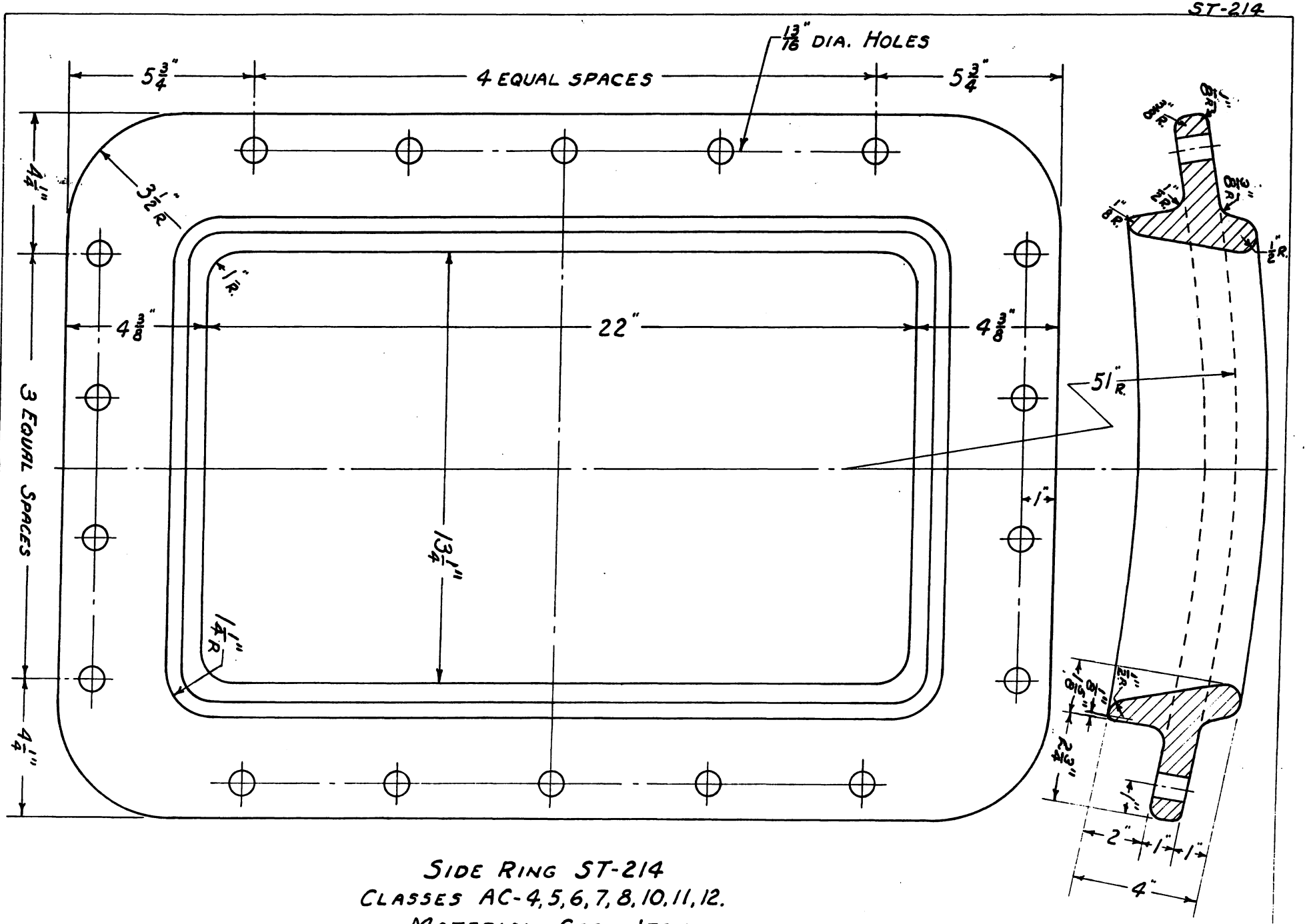

SIDE RING ST-214
CLASSES AC-4,5,6,7,8,10,11,12.
MATERIAL: CAST IRON

FIG. 4-38

STANDING TEST PLANT, SACRAMENTO

JUNE 15, 1949

ST-215

JUNE 15, 1949

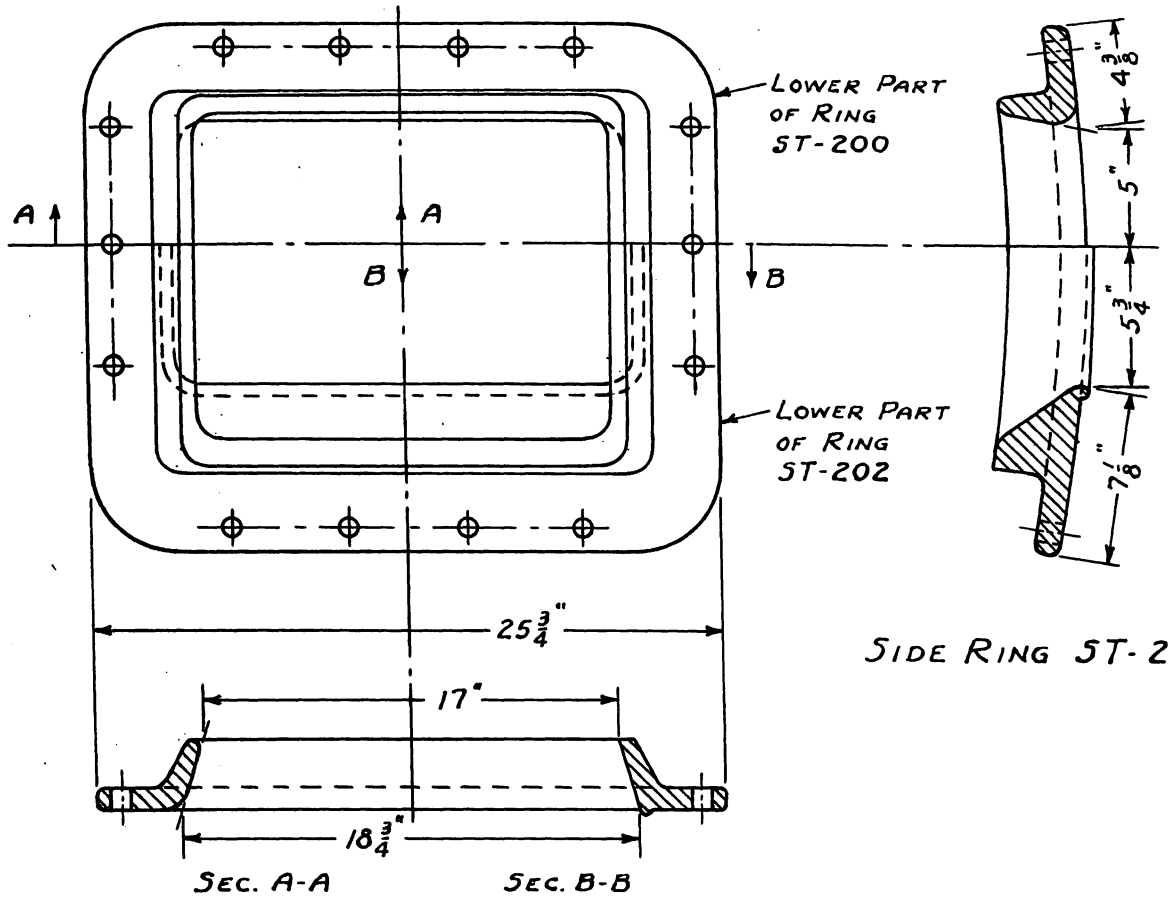

SIDE RING ST-215A

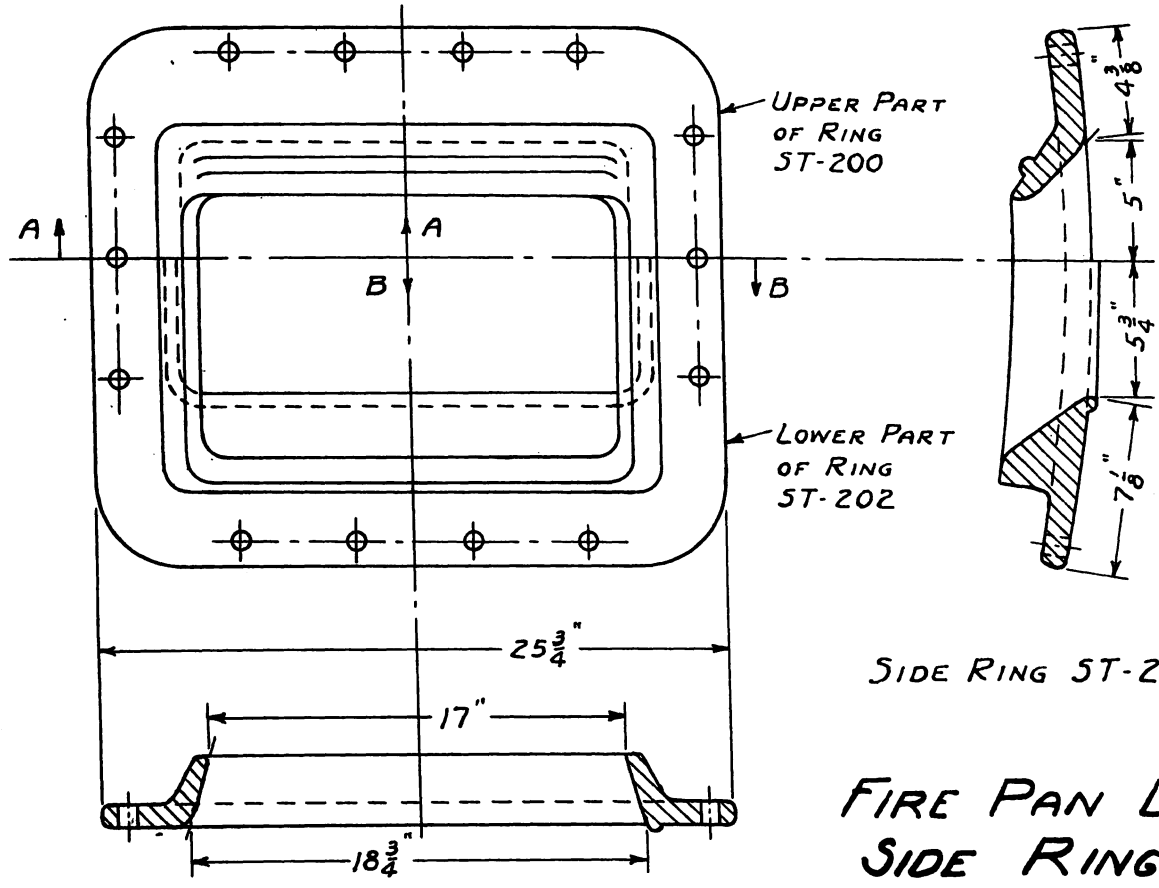

SIDE RING ST-215B

STANDING TEST PLANT, SACRAMENTO

FIRE PAN DRAFT SIDE RINGS

STANDING TEST ENGINE 4401

FIG. 4-39

ST-258

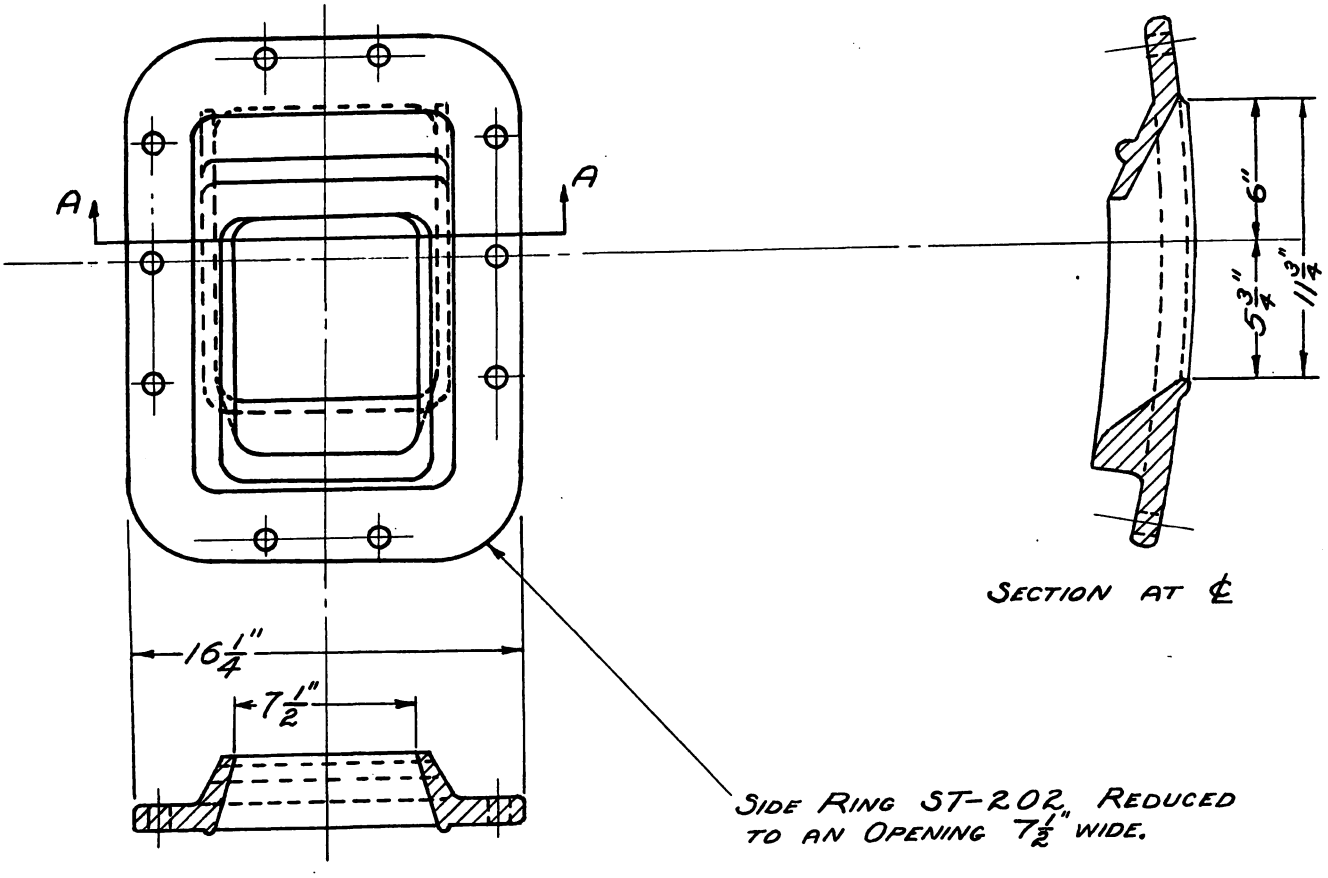

SECTION A-A

SIDE RING No. ST-258

FIRE PAN DRAFT SIDE RING

STANDING TEST ENGINE 4401

STANDING TEST PLANT, SACRAMENTO JUNE 15, 1949

FIG. 4-40

ST-259

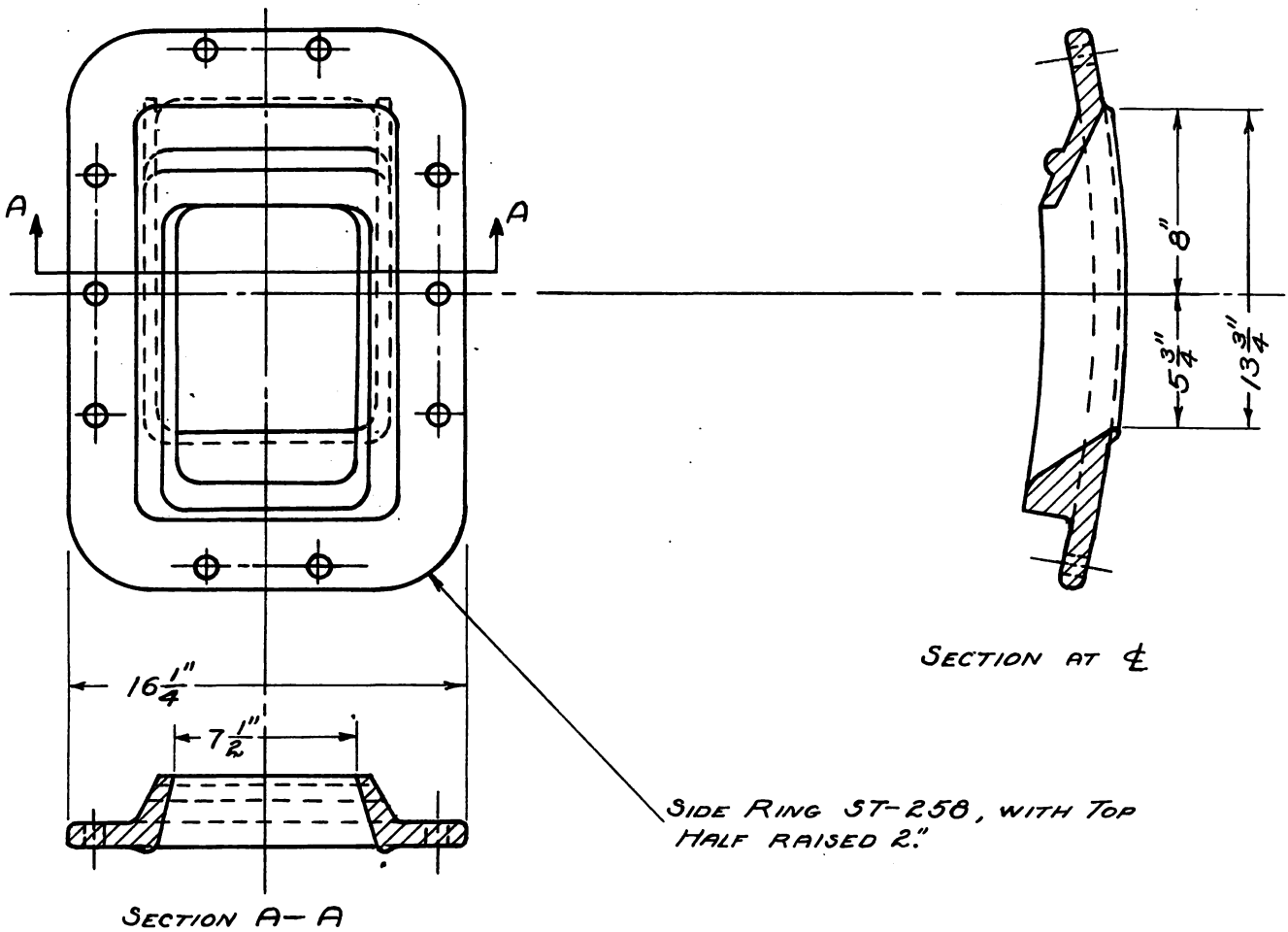

SIDE RING No. ST-259

FIRE PAN DRAFT SIDE RING

STANDING TEST ENGINE 4401

STANDING TEST PLANT, SACRAMENTO JUNE 15, 1949

FIG. 4-41

ST-260

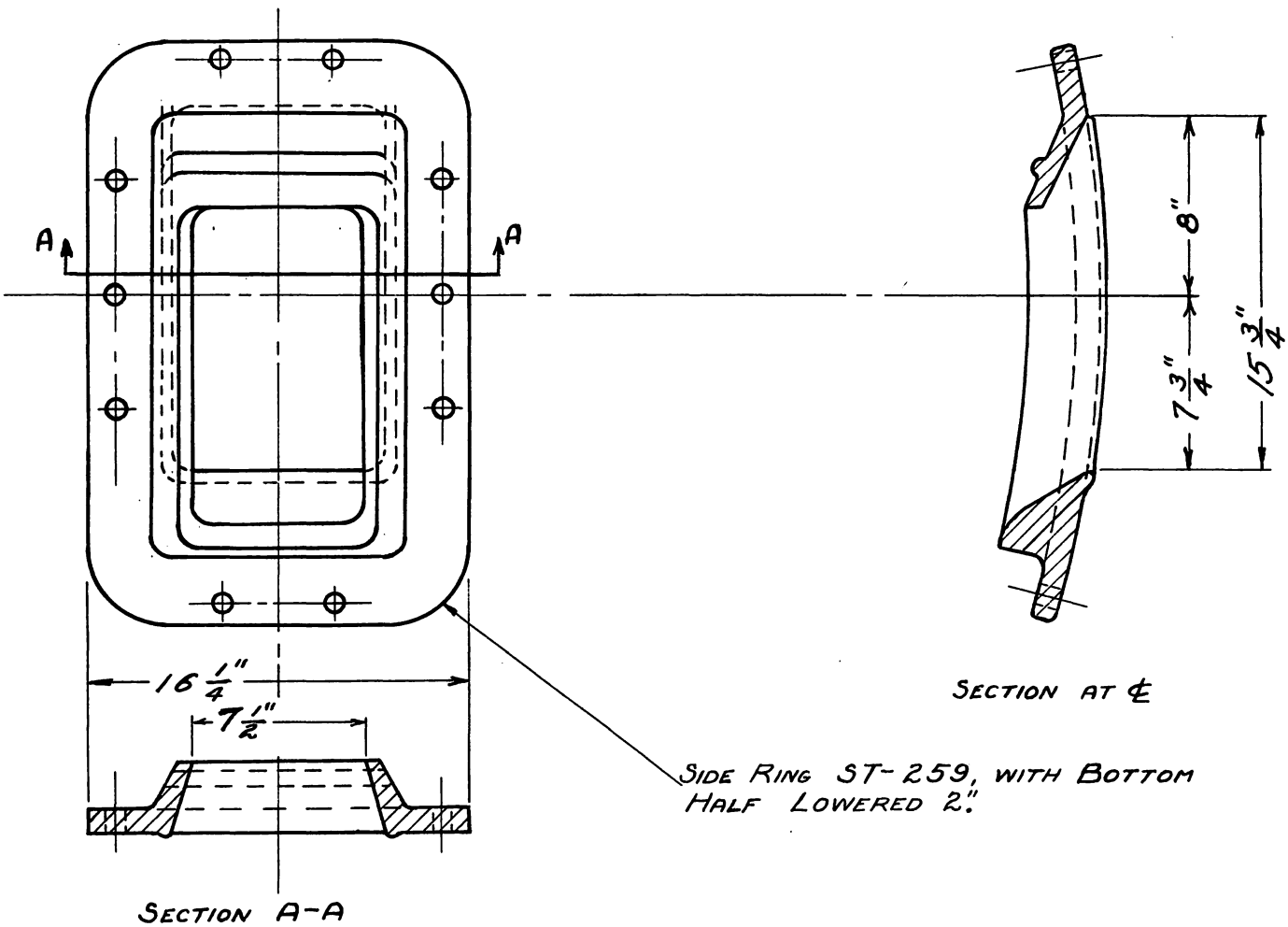

SIDE RING No. ST-260

FIRE PAN DRAFT SIDE RING

STANDING TEST ENGINE 4401

STANDING TEST PLANT, SACRAMENTO JUNE 15, 1949

FIG. 4-42

ST-199A

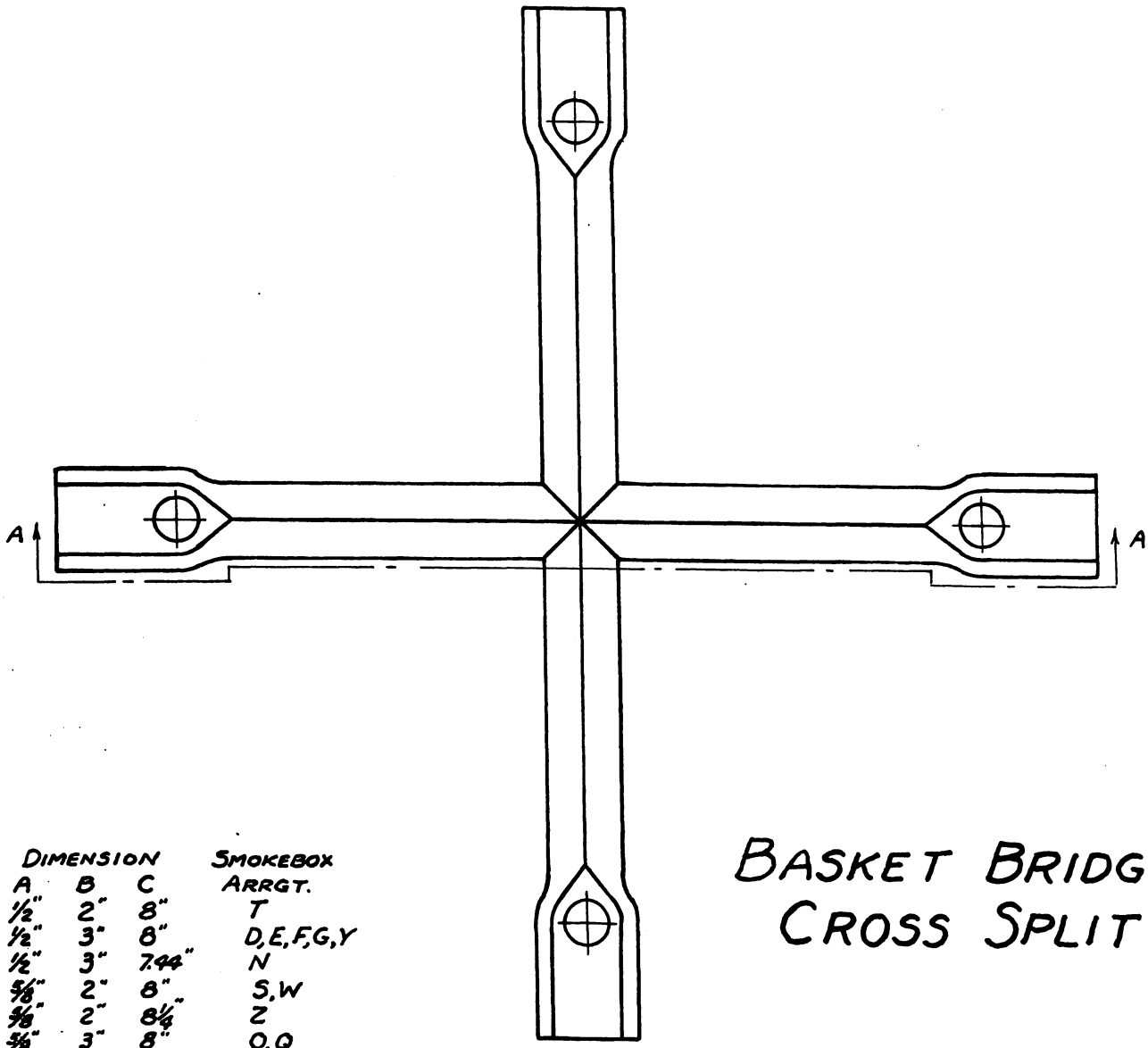

BASKET BRIDGE CROSS SPLIT

DIMENSION A	B	C	SMOKEBOX ARRGT.
1/2"	2"	8"	T
1/2"	3"	8"	D,E,F,G,Y
1/2"	3"	7.44"	N
5/8"	2"	8"	S,W
5/8"	2"	8 1/4"	Z
5/8"	3"	8"	O,Q
3/4"	3"	8"	R
3/4"	4 1/2"	8"	U

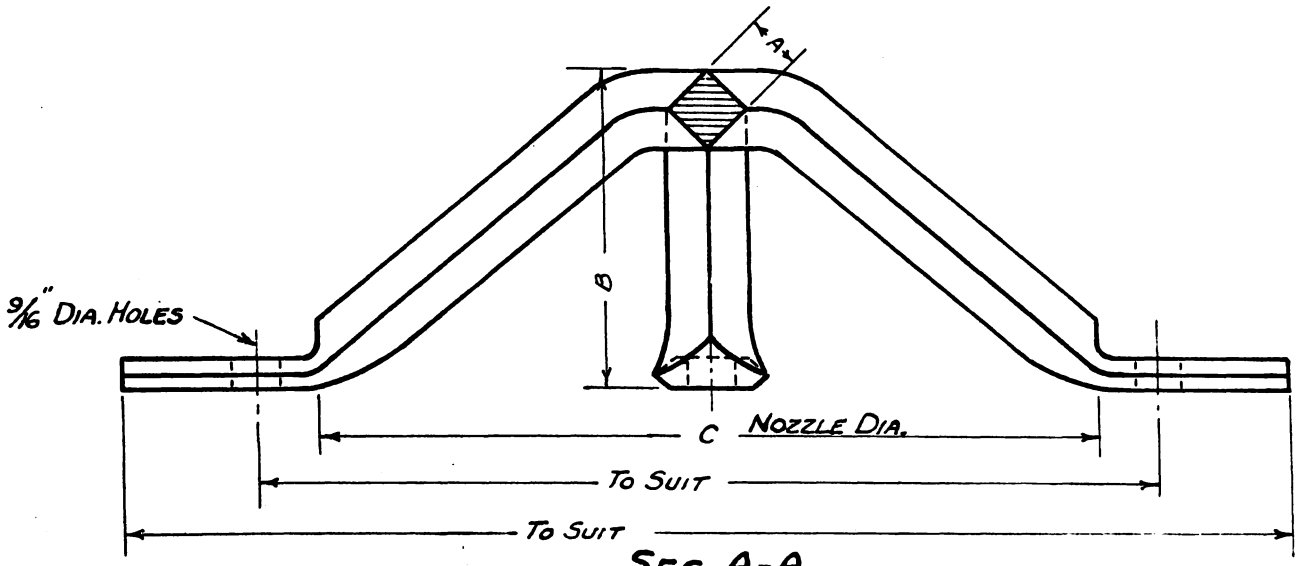

SEC. A-A

STANDING TEST PLANT, SACRAMENTO

JUNE 15, 1949

FIG. 4-43

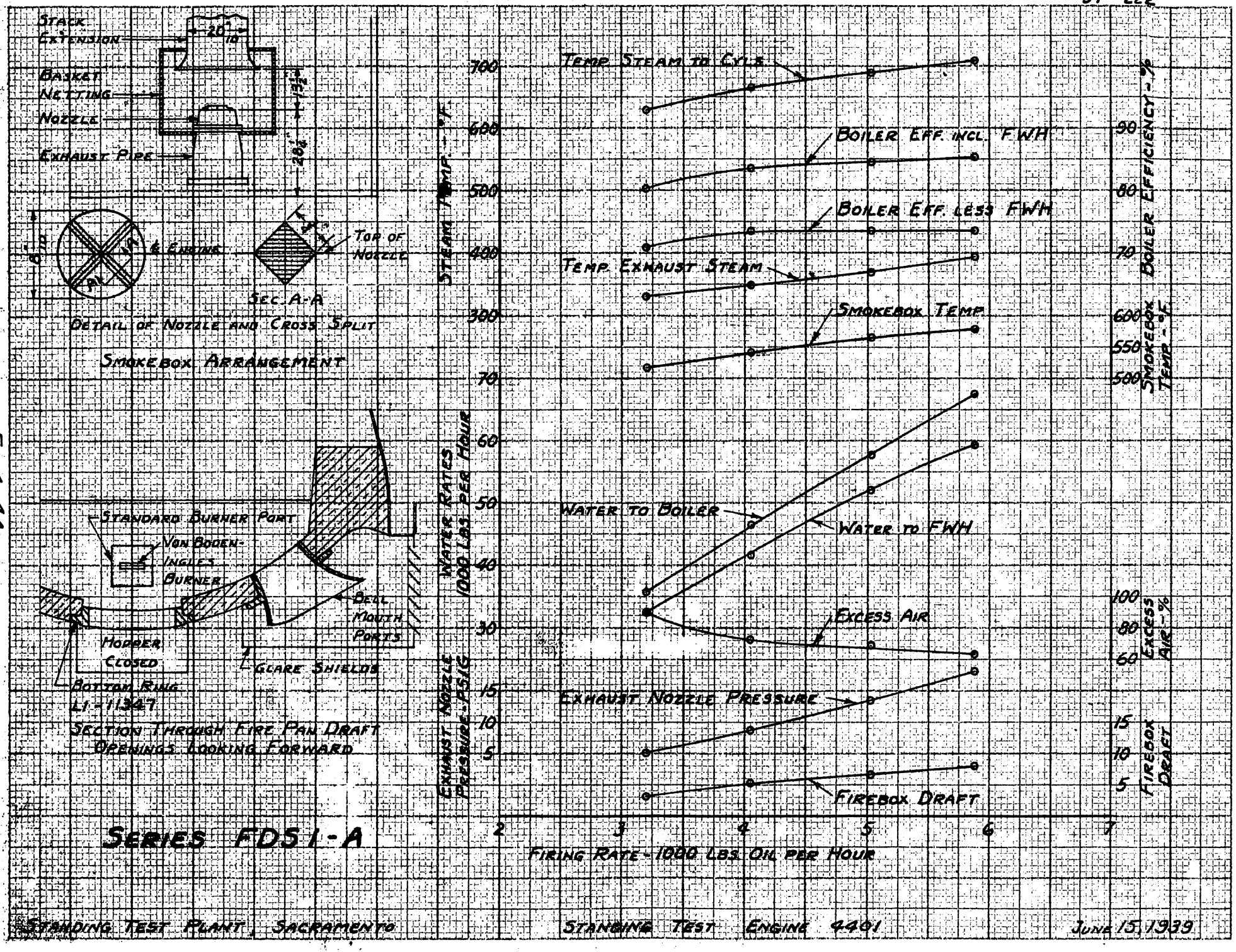
Stack Extension
Basket Netting
Nozzle
Exhaust Pipe
20"
10"
12½"
20¾"
Top of Nozzle
℄ Engine
Sec. A-A
Detail of Nozzle and Cross Split
Smokebox Arrangement
Standard Burner Port
Von Boden-Ingles Burner
Bell Mouth Ports
Hopper Closed
Glare Shields
Bottom Ring
L1-11347
Section Through Fire Pan Draft Openings Looking Forward
Series FD51-A
Steam Temp. - °F.
Water Rates 1000 Lbs. per Hour
Exhaust Nozzle Pressure - PSIG
Temp. Steam to Cyls.
Boiler Eff. incl. FWH
Boiler Eff. less FWH
Temp. Exhaust Steam
Smokebox Temp.
Water to Boiler
Water to FWH
Excess Air
Exhaust Nozzle Pressure
Firebox Draft
Boiler Efficiency - %
Smokebox Temp. - °F.
Excess Air - %
Firebox Draft
Firing Rate - 1000 Lbs. Oil per Hour
Standing Test Plant, Sacramento
Standing Test Engine 4401
June 15, 1939

Fig. 4-44

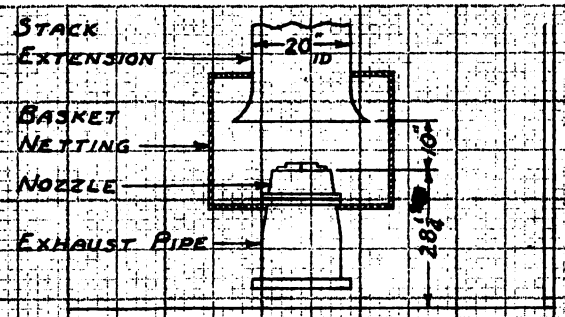

DETAIL OF NOZZLE AND CROSS SPLIT

SMOKEBOX ARRANGEMENT

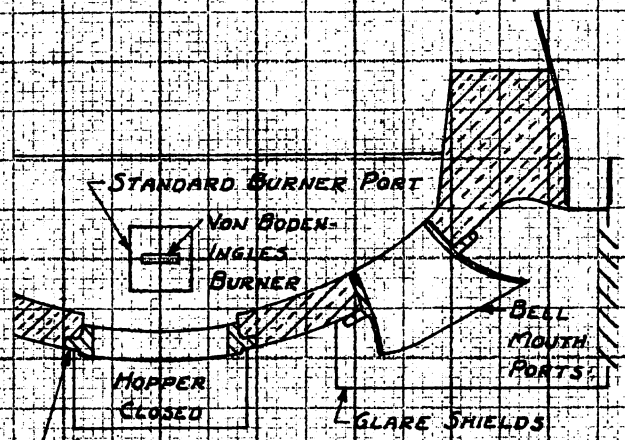

SECTION THROUGH FIRE PAN DRAFT OPENINGS LOOKING FORWARD

FIG. 4-45

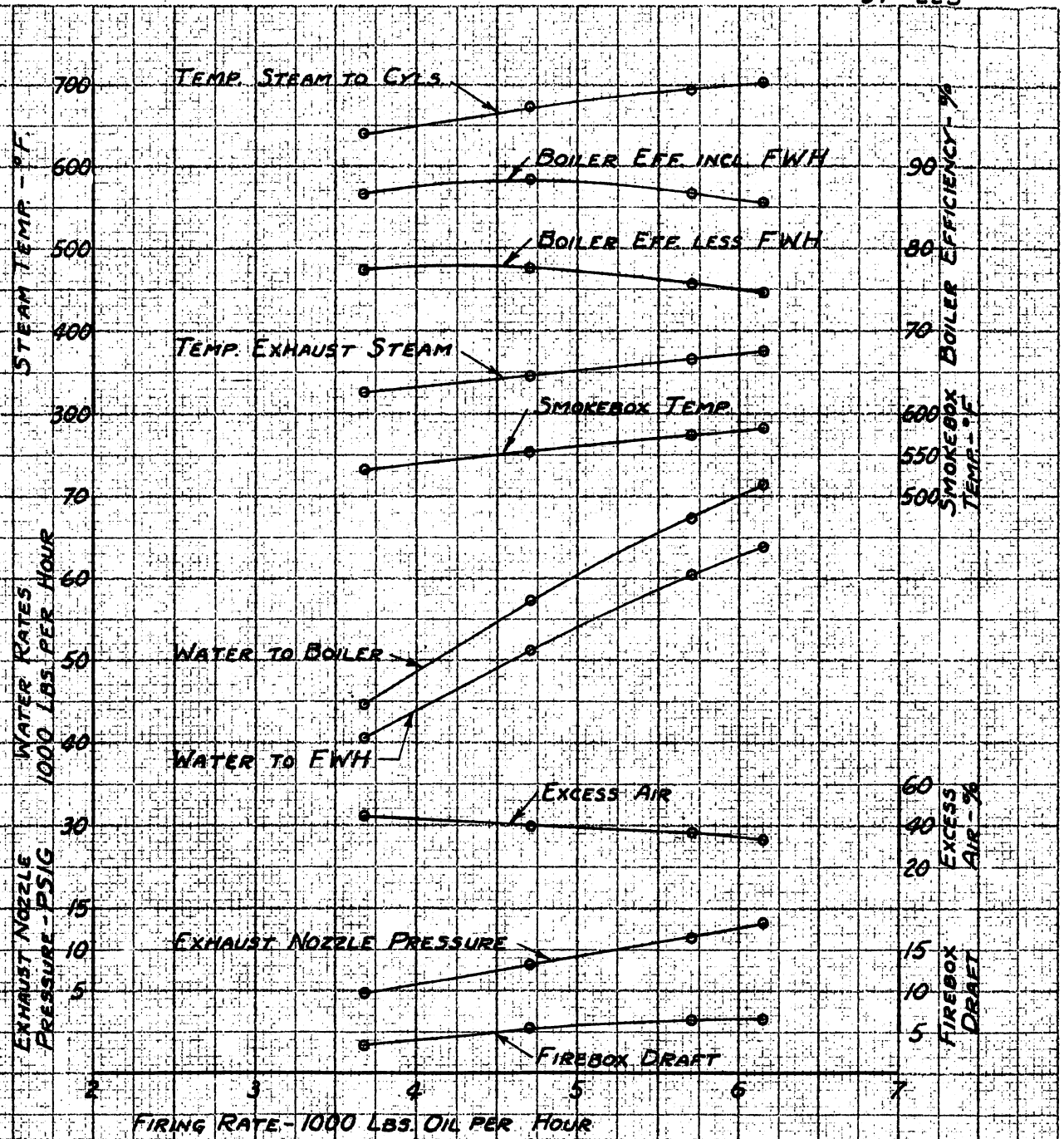

SERIES FDS 1-L

STANDING TEST PLANT, SACRAMENTO

STANDING TEST ENGINE 4401

JUNE 15, 1949

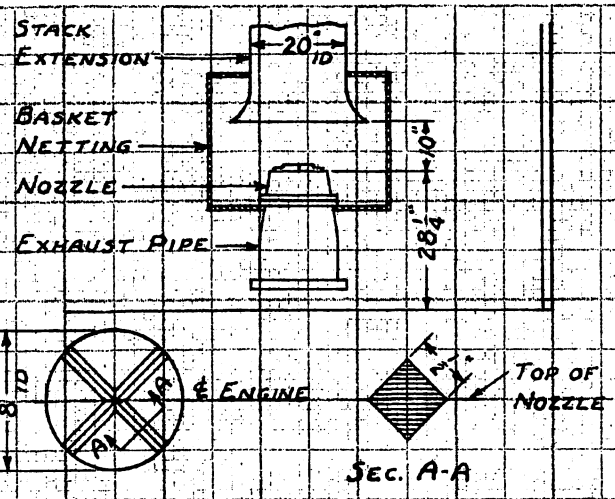

DETAIL OF NOZZLE AND CROSS SPLIT

SMOKEBOX ARRANGEMENT

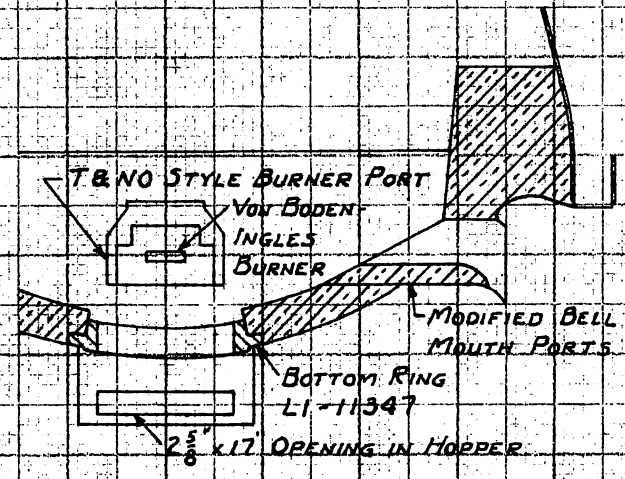

SECTION THROUGH FIRE PAN DRAFT OPENINGS LOOKING FORWARD

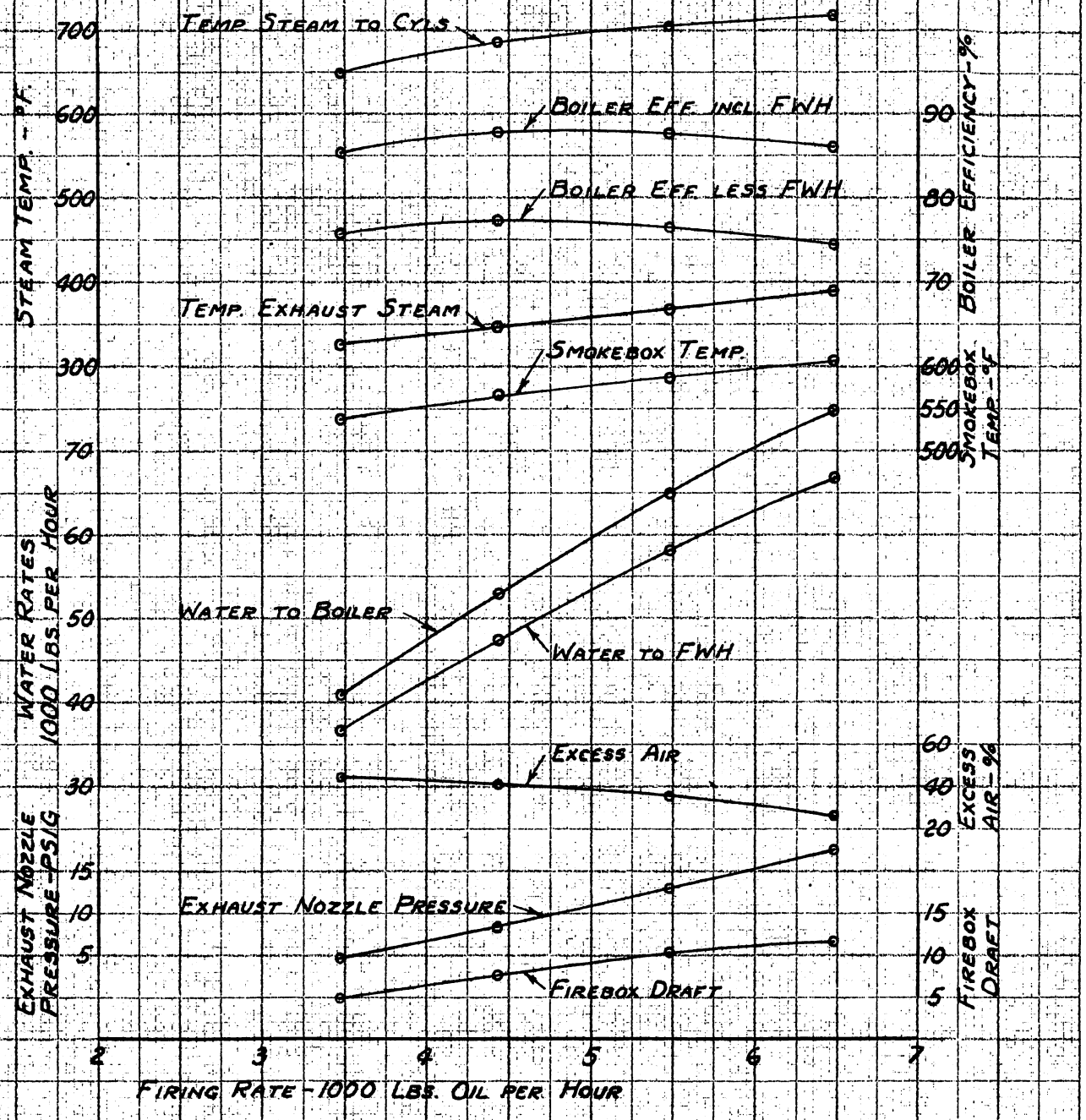

Fig. 4-46

SERIES FDS 2-J

STANDING TEST PLANT, SACRAMENTO — STANDING TEST ENGINE 4401 — JUNE 15, 1949

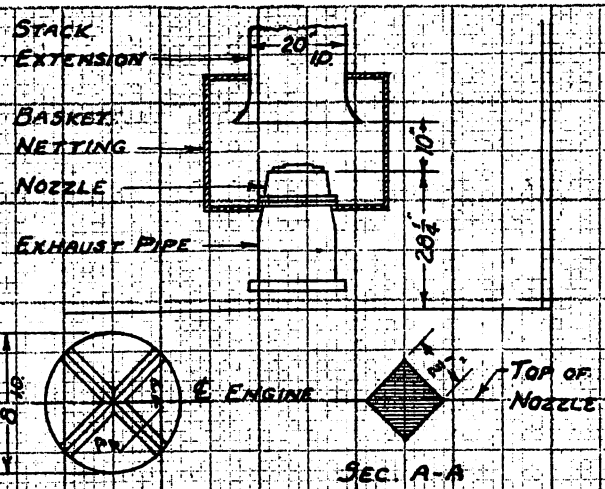

DETAIL OF NOZZLE AND CROSS SPLIT

SMOKEBOX ARRANGEMENT

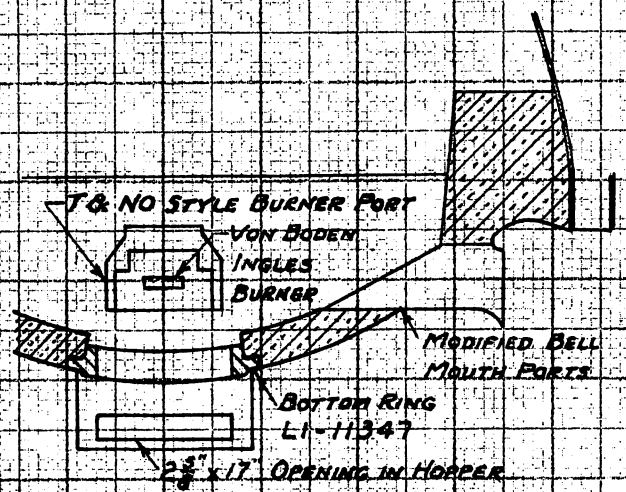

SECTION THROUGH FIRE PAN DRAFT OPENINGS LOOKING FORWARD

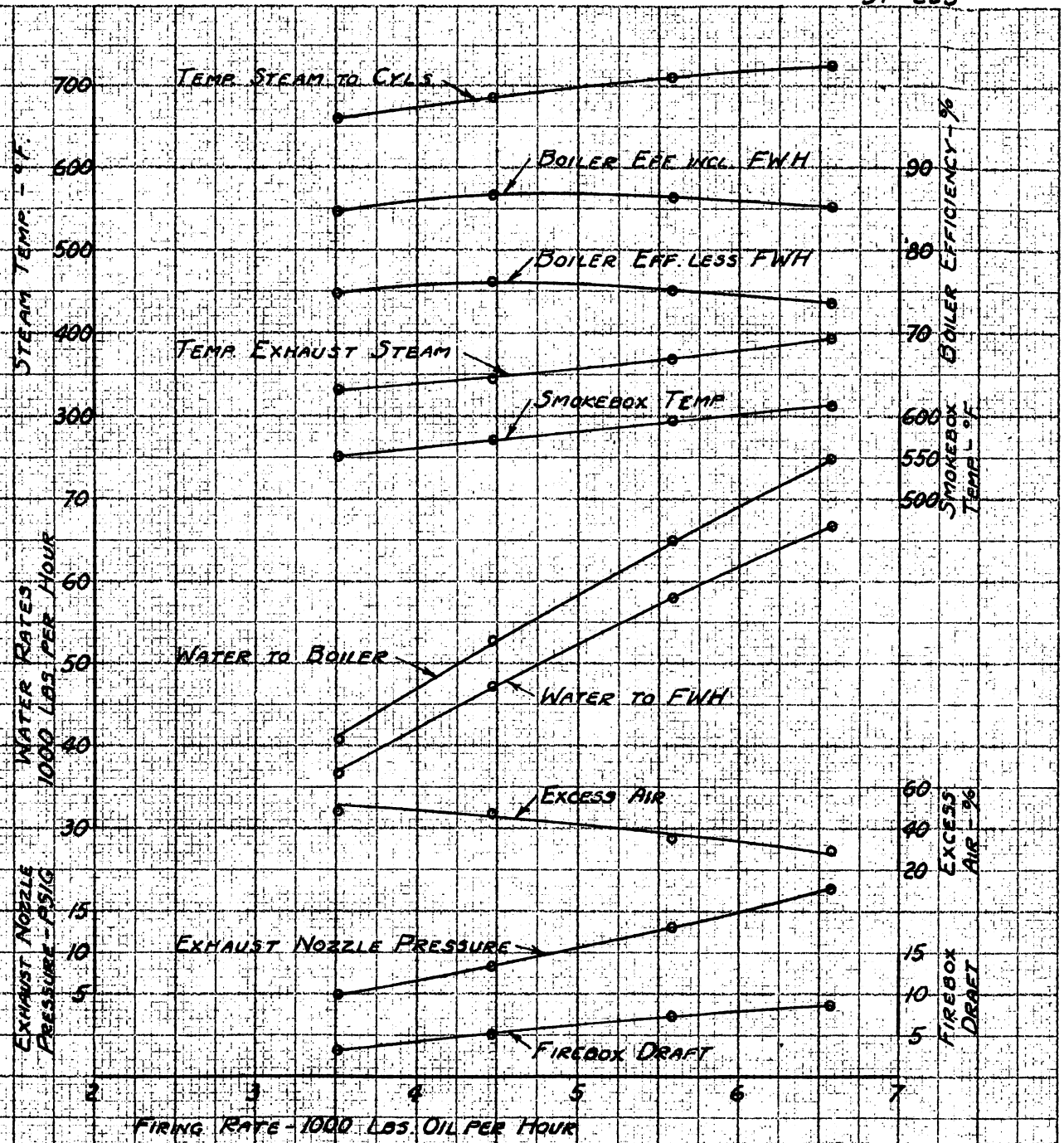

FIG. A-41

SERIES FDS 3-J

STANDING TEST PLANT, SACRAMENTO — STANDING TEST ENGINE 4401 — JUNE 15, 1949

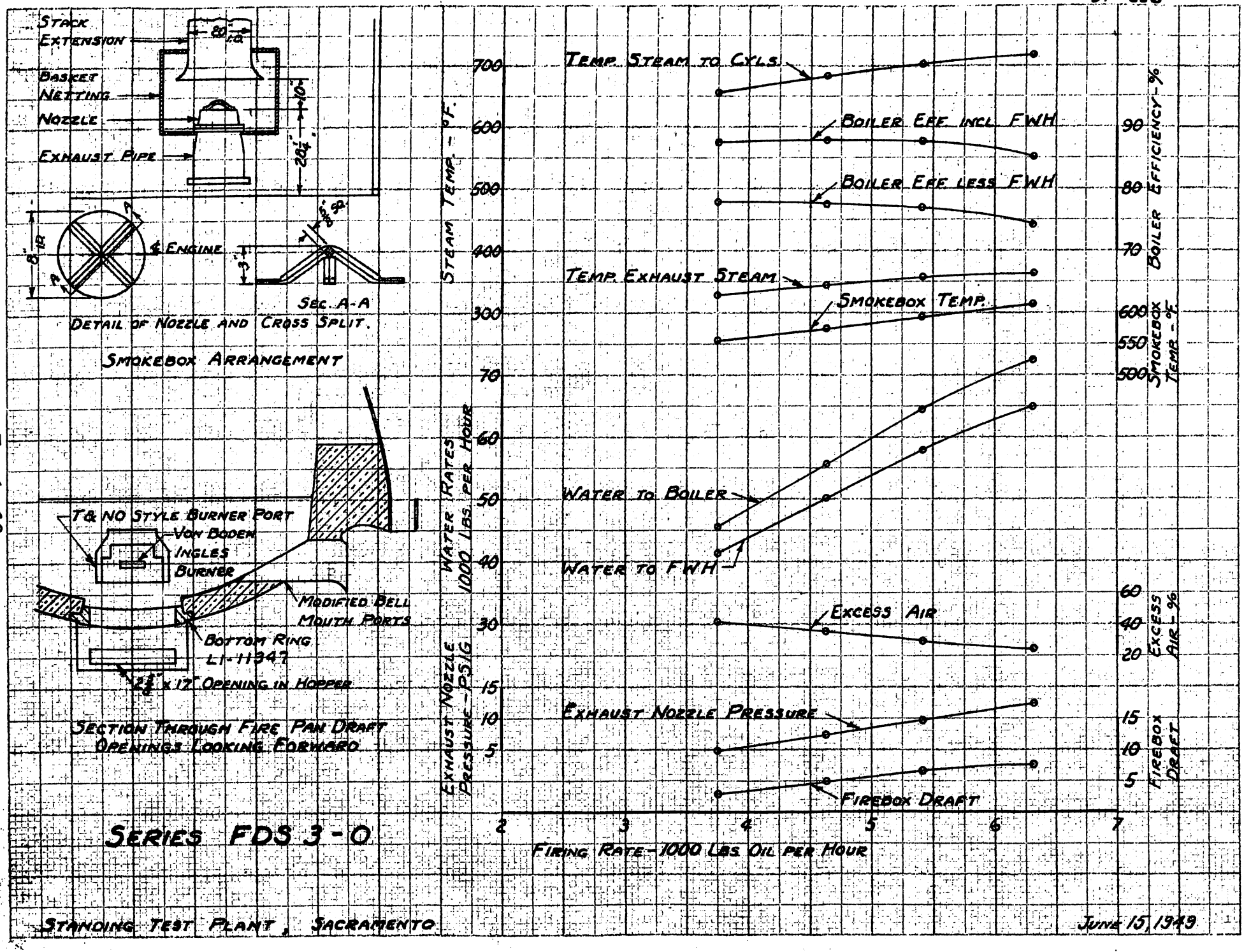
STACK EXTENSION
BASKET NETTING
NOZZLE
EXHAUST PIPE
20 I.D.
10"
20¼"
℄ ENGINE
SEC. A-A
DETAIL OF NOZZLE AND CROSS SPLIT.
SMOKEBOX ARRANGEMENT
T&NO STYLE BURNER PORT
VON BODEN INGLES BURNER
MODIFIED BELL MOUTH PORTS
BOTTOM RING L1-11347
2¾" x 17" OPENING IN HOPPER
SECTION THROUGH FIRE PAN DRAFT OPENINGS LOOKING FORWARD
STEAM TEMP. - °F.
700
600
500
400
300
WATER RATES 1000 LBS. PER HOUR
70
60
50
40
30
EXHAUST NOZZLE PRESSURE - PSIG
15
10
5
TEMP. STEAM TO CYLS.
BOILER EFF. INCL. FWH
BOILER EFF. LESS FWH
TEMP. EXHAUST STEAM
SMOKEBOX TEMP.
WATER TO BOILER
WATER TO FWH
EXCESS AIR
EXHAUST NOZZLE PRESSURE
FIREBOX DRAFT
BOILER EFFICIENCY - %
90
80
70
SMOKEBOX TEMP. - °F.
600
550
500
EXCESS AIR - %
60
40
20
FIREBOX DRAFT
15
10
5
2
3
4
5
6
7
FIRING RATE - 1000 LBS. OIL PER HOUR
SERIES FDS 3-0
STANDING TEST PLANT, SACRAMENTO
JUNE 15, 1949

FIG. 4-48

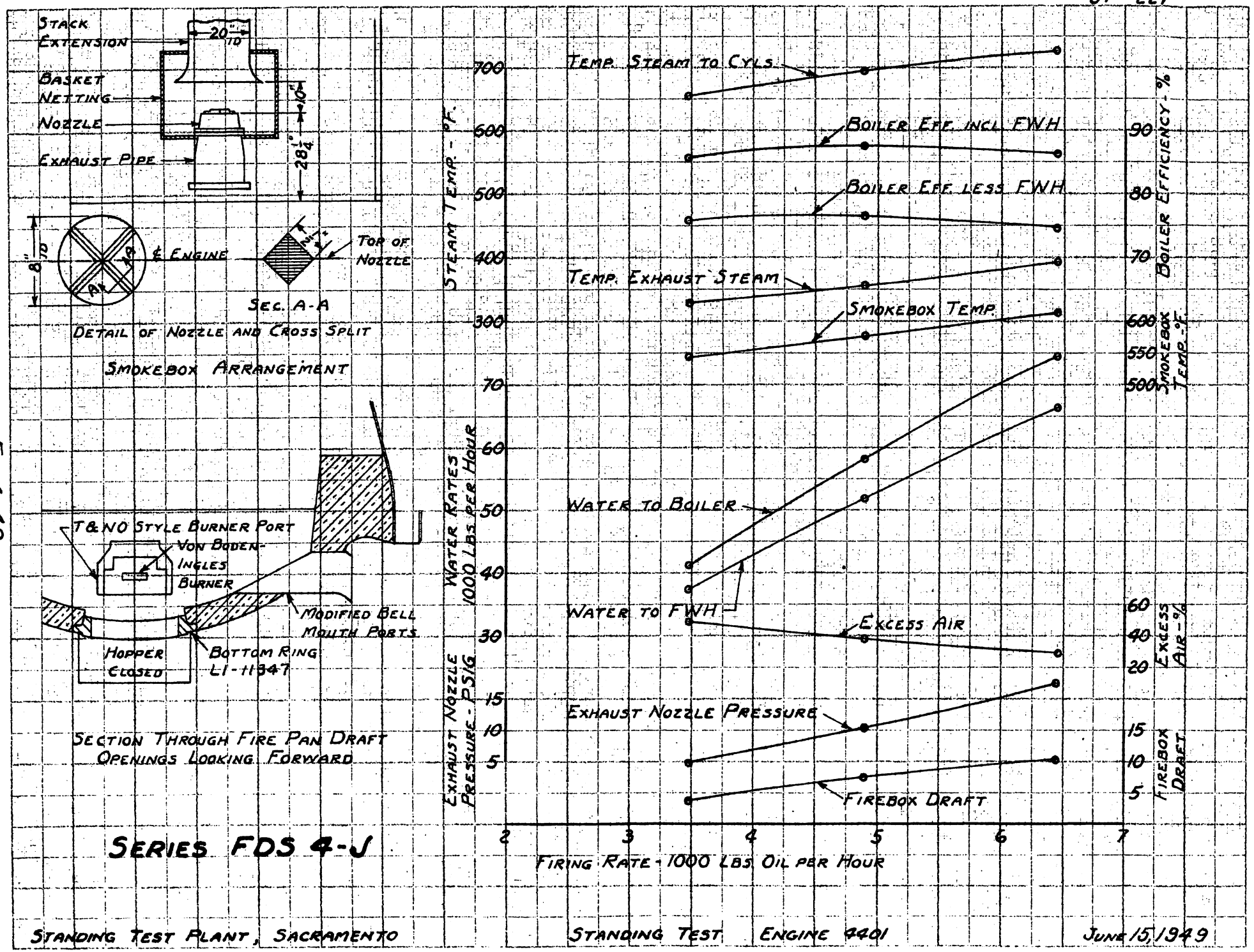
STACK EXTENSION
20" ID
BASKET NETTING
NOZZLE
EXHAUST PIPE
10"
28¼"
8" ID
℄ ENGINE
TOP OF NOZZLE
SEC. A-A
DETAIL OF NOZZLE AND CROSS SPLIT
SMOKEBOX ARRANGEMENT
T&NO STYLE BURNER PORT
VON BODEN-INGLES BURNER
MODIFIED BELL MOUTH PORTS
HOPPER CLOSED
BOTTOM RING LI-11347
SECTION THROUGH FIRE PAN DRAFT OPENINGS LOOKING FORWARD
SERIES FDS 4-J
STEAM TEMP. - °F.
700
600
500
400
300
WATER RATES 1000 LBS PER HOUR
70
60
50
40
30
EXHAUST NOZZLE PRESSURE - PS/G
15
10
5
TEMP. STEAM TO CYLS.
BOILER EFF. INCL. FWH
BOILER EFF. LESS FWH
TEMP. EXHAUST STEAM
SMOKEBOX TEMP.
WATER TO BOILER
WATER TO FWH
EXCESS AIR
EXHAUST NOZZLE PRESSURE
FIREBOX DRAFT
BOILER EFFICIENCY - %
90
80
70
SMOKEBOX TEMP. - °F.
600
550
500
EXCESS AIR - %
60
40
20
FIREBOX DRAFT
15
10
5
2
3
4
5
6
7
FIRING RATE - 1000 LBS OIL PER HOUR
STANDING TEST PLANT, SACRAMENTO
STANDING TEST ENGINE 4401
JUNE 15, 1949

FIG. 4-49

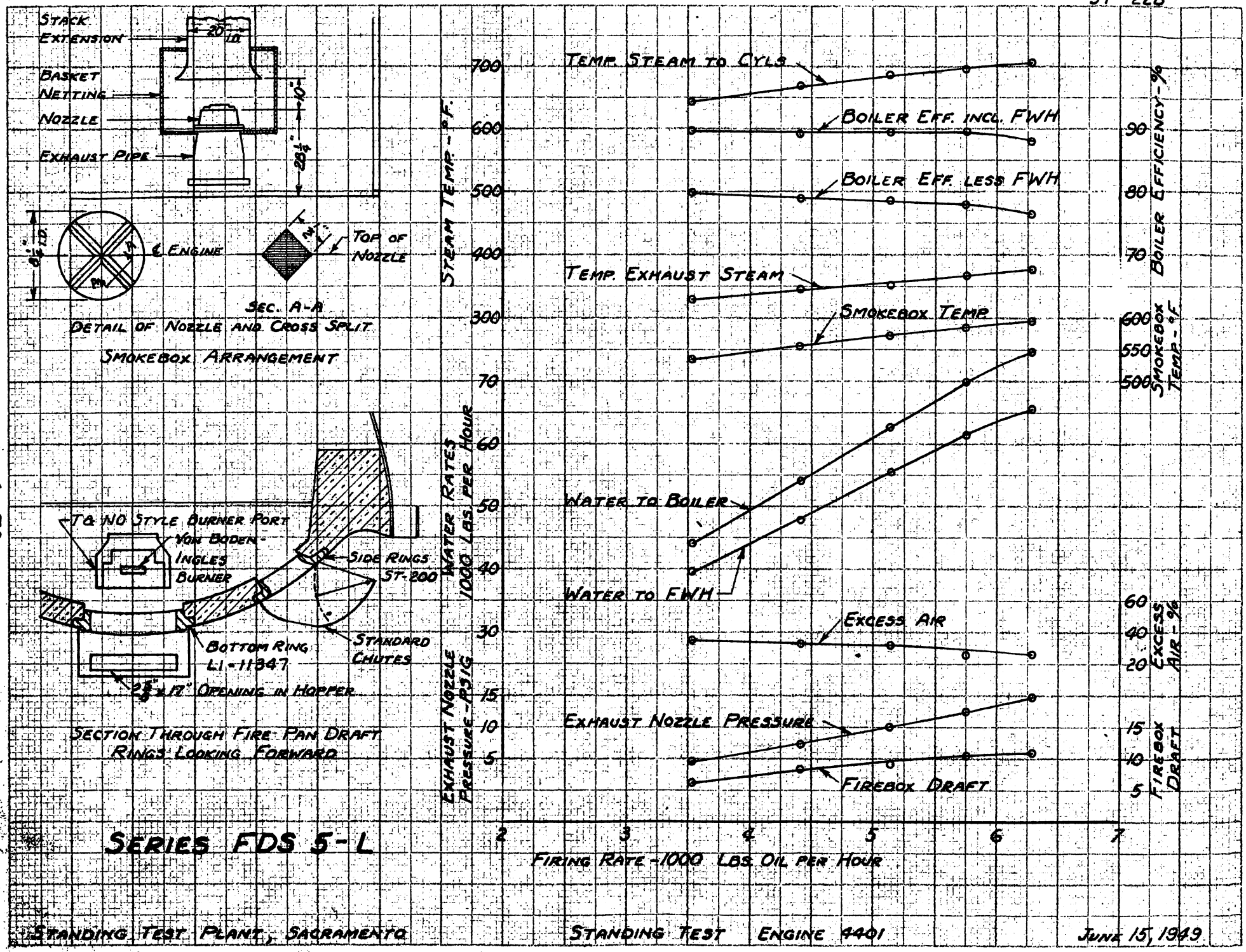
STACK EXTENSION
20"
10"
BASKET NETTING
NOZZLE
EXHAUST PIPE
10"
20¼"
8½"
10"
℄ ENGINE
TOP OF NOZZLE
SEC. A-A
DETAIL OF NOZZLE AND CROSS SPLIT
SMOKEBOX ARRANGEMENT
T&NO STYLE BURNER PORT
VON BODEN-INGLES BURNER
SIDE RINGS ST-200
BOTTOM RING L1-11347
STANDARD CHUTES
2⅝" x 17" OPENING IN HOPPER
SECTION THROUGH FIRE PAN DRAFT RINGS LOOKING FORWARD
SERIES FDS 5-L
STEAM TEMP - °F.
700
600
500
400
300
TEMP. STEAM TO CYLS.
BOILER EFF. INCL. FWH
BOILER EFF. LESS FWH
TEMP. EXHAUST STEAM
SMOKEBOX TEMP.
BOILER EFFICIENCY - %
90
80
70
SMOKEBOX TEMP - °F
600
550
500
WATER RATES 1000 LBS. PER HOUR
70
60
50
40
30
WATER TO BOILER
WATER TO FWH
EXCESS AIR
EXCESS AIR - %
60
40
20
EXHAUST NOZZLE PRESSURE - PSIG
15
10
5
EXHAUST NOZZLE PRESSURE
FIREBOX DRAFT
FIREBOX DRAFT
15
10
5
2
3
4
5
6
7
FIRING RATE - 1000 LBS. OIL PER HOUR
STANDING TEST PLANT, SACRAMENTO
STANDING TEST ENGINE 4401
JUNE 15, 1949

Fig. 4-50

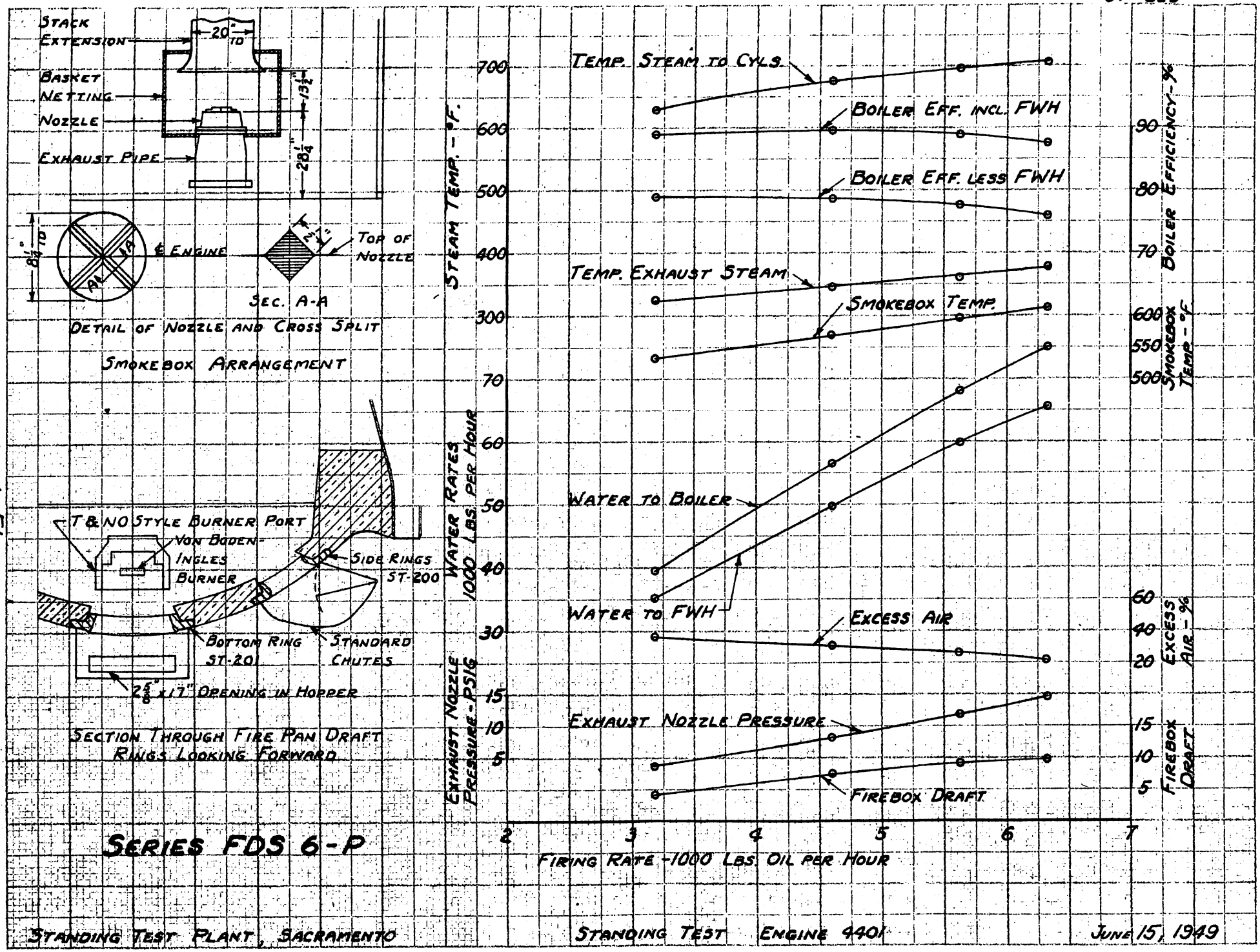
STACK EXTENSION
20" TD
BASKET NETTING
NOZZLE
EXHAUST PIPE
13½"
28¼"
8¼" TD
℄ ENGINE
TOP OF NOZZLE
2½"
SEC. A-A
DETAIL OF NOZZLE AND CROSS SPLIT
SMOKEBOX ARRANGEMENT
T & NO STYLE BURNER PORT
VON BODEN-INGLES BURNER
SIDE RINGS ST-200
BOTTOM RING ST-20
STANDARD CHUTES
2⅝" x 17" OPENING IN HOPPER
SECTION THROUGH FIRE PAN DRAFT RINGS LOOKING FORWARD
SERIES FDS 6-P
STEAM TEMP. - °F.
700
600
500
400
300
WATER RATES 1000 LBS. PER HOUR
70
60
50
40
30
EXHAUST NOZZLE PRESSURE - PSIG
15
10
5
TEMP. STEAM TO CYLS.
BOILER EFF. INCL. FWH
BOILER EFF. LESS FWH
TEMP. EXHAUST STEAM
SMOKEBOX TEMP.
WATER TO BOILER
WATER TO FWH
EXCESS AIR
EXHAUST NOZZLE PRESSURE
FIREBOX DRAFT
BOILER EFFICIENCY - %
90
80
70
SMOKEBOX TEMP - °F
600
550
500
EXCESS AIR - %
60
40
20
FIREBOX DRAFT
15
10
5
2
3
4
5
6
7
FIRING RATE - 1000 LBS. OIL PER HOUR
STANDING TEST PLANT, SACRAMENTO
STANDING TEST ENGINE 4401
JUNE 15, 1949

FIG. 4-51

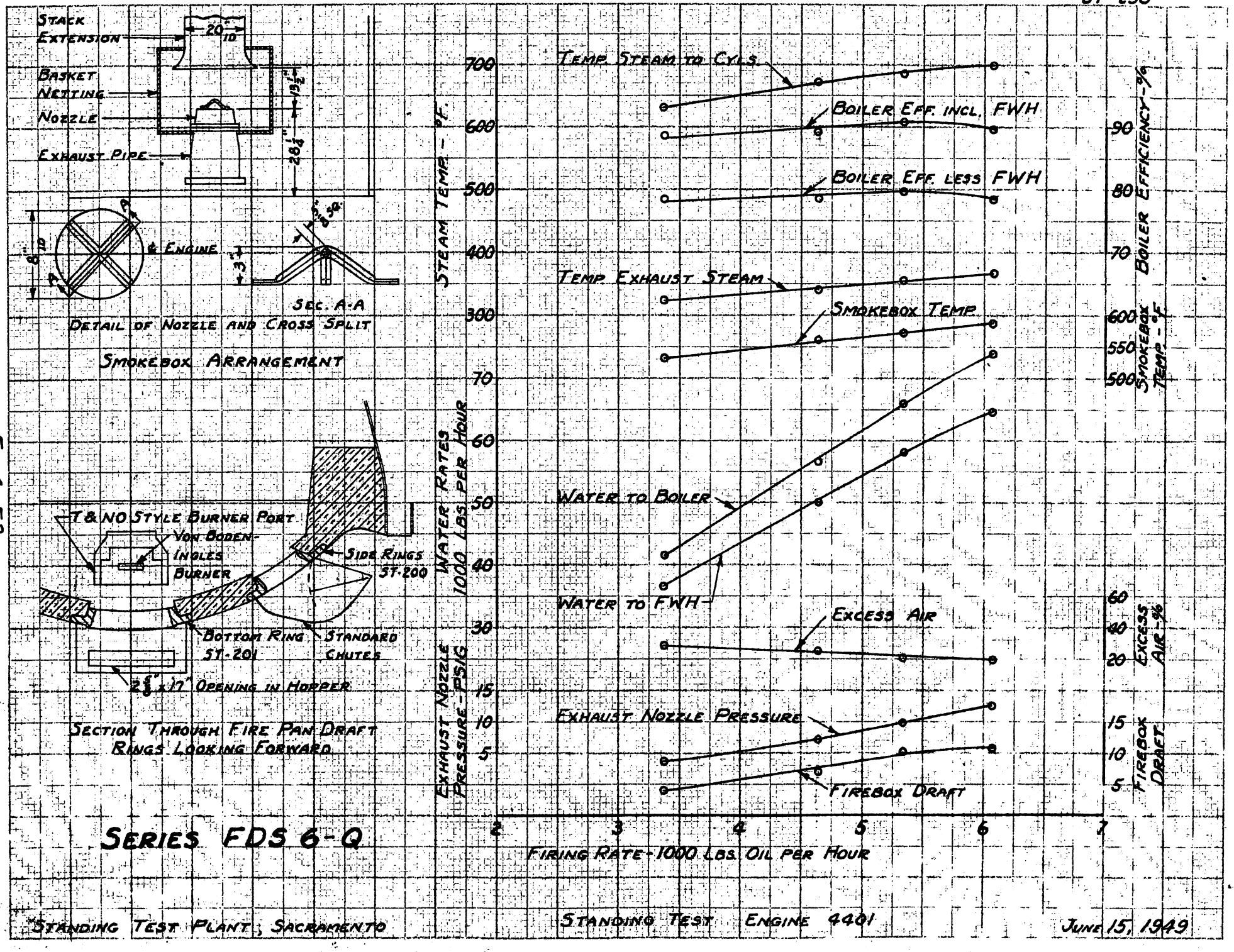
Stack Extension
20" ID
Basket Netting
Nozzle
Exhaust Pipe
13½"
28¼"
8" ID
℄ Engine
3"
2½" Sq.
Sec. A-A
Detail of Nozzle and Cross Split
Smokebox Arrangement
T & NO Style Burner Port
Von Boden-Ingles Burner
Side Rings ST-200
Bottom Ring ST-201
Standard Chutes
2⅝" x 17" Opening in Hopper
Section Through Fire Pan Draft Rings Looking Forward
Series FDS 6-Q
Steam Temp - °F.
700
600
500
400
300
Water Rates 1000 Lbs. per Hour
70
60
50
40
30
Exhaust Nozzle Pressure - PSIG
15
10
5
Temp. Steam to Cyls.
Boiler Eff. incl. FWH
Boiler Eff. less FWH
Temp. Exhaust Steam
Smokebox Temp.
Water to Boiler
Water to FWH
Excess Air
Exhaust Nozzle Pressure
Firebox Draft
Boiler Efficiency - %
90
80
70
Smokebox Temp. - °F
600
550
500
Excess Air - %
60
40
20
Firebox Draft
15
10
5
2
3
4
5
6
7
Firing Rate - 1000 Lbs. Oil per Hour
Standing Test Plant; Sacramento
Standing Test Engine 4401
June 15, 1949

Fig. 4-52

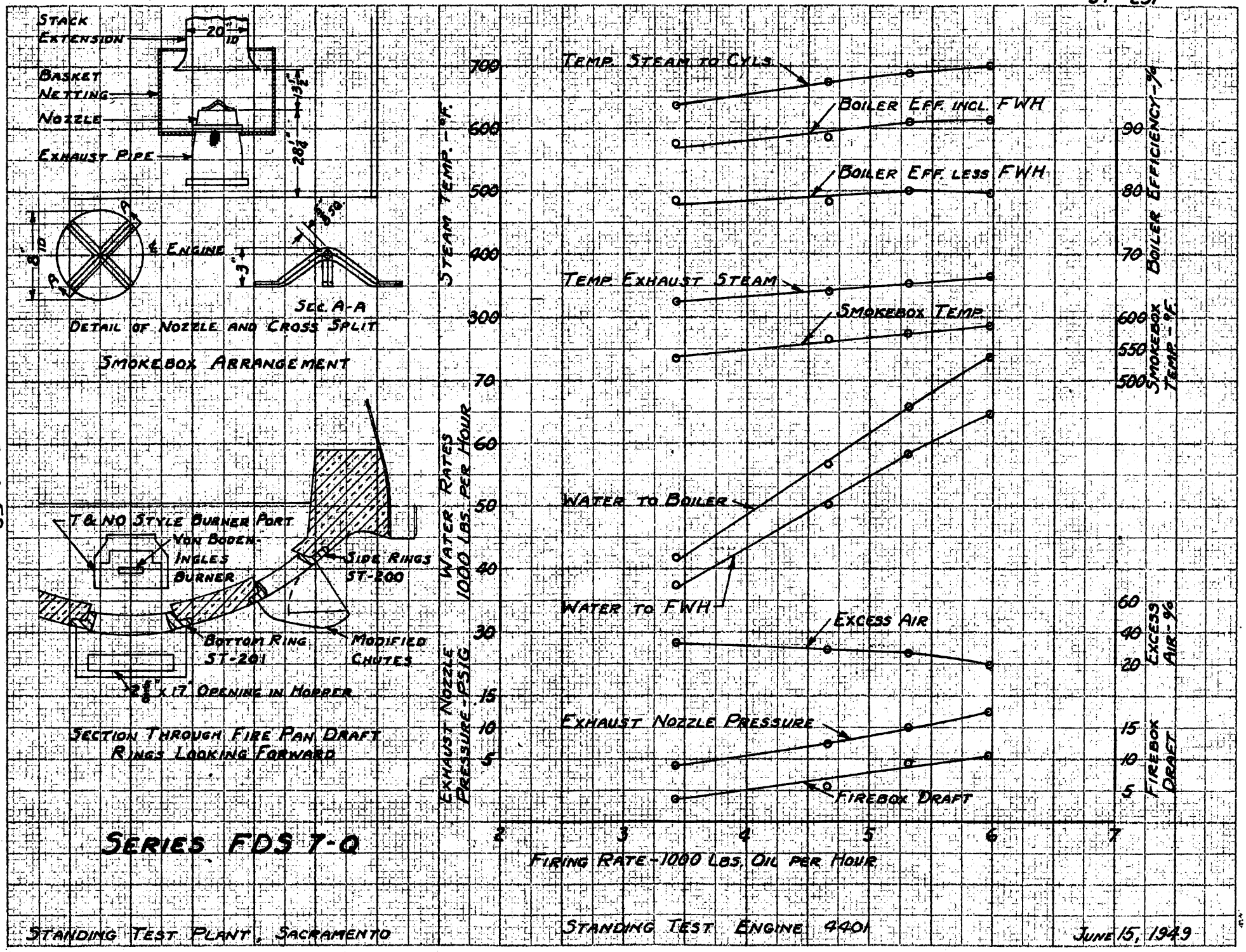

Fig. 4-53

Standing Test Plant, Sacramento

Standing Test Engine 4401

June 15, 1949

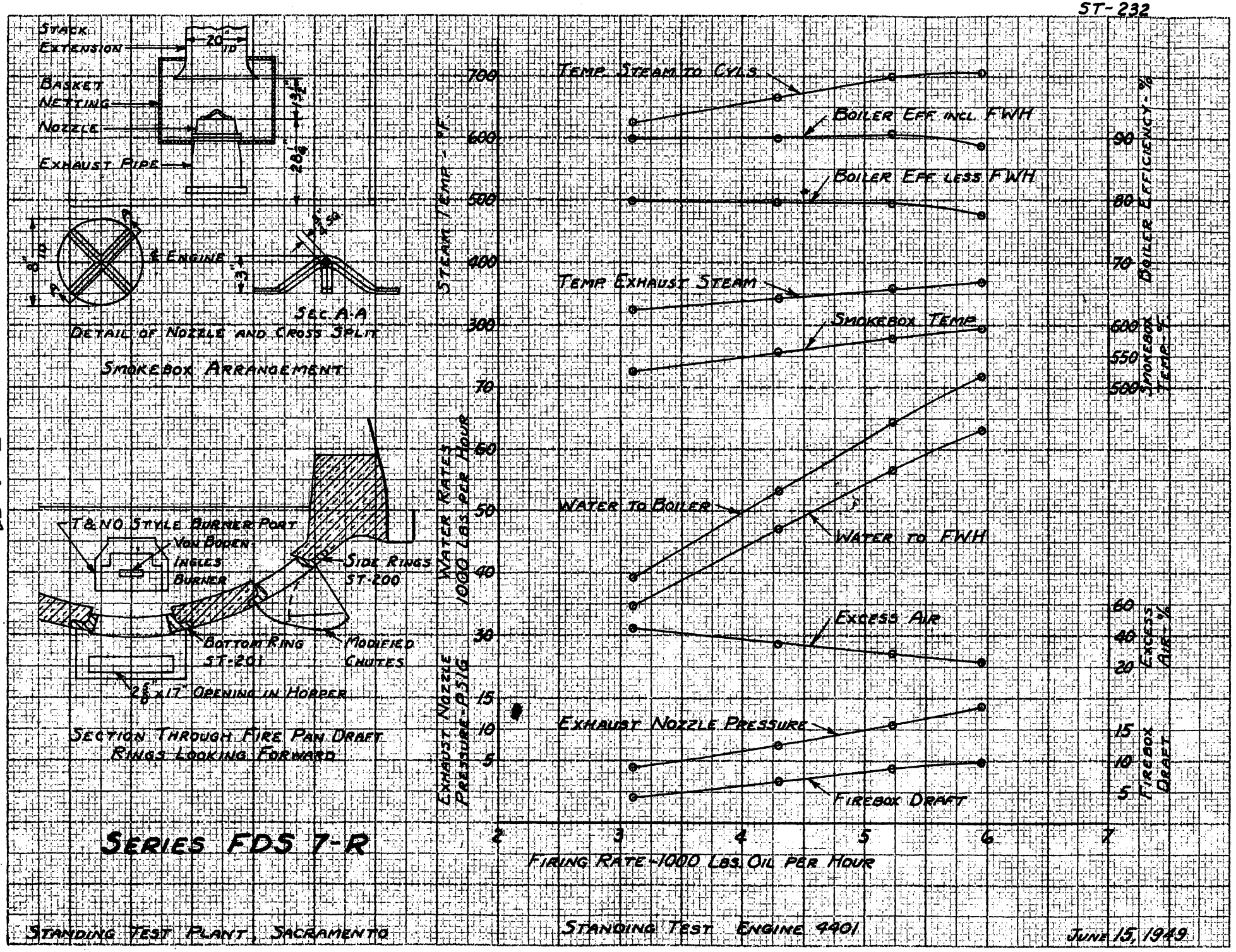
Stack Extension
20" ID
Basket Netting
Nozzle
Exhaust Pipe
℄ Engine
Sec. A-A
Detail of Nozzle and Cross Split
Smokebox Arrangement
T&NO Style Burner Port
Von Bogen Ingles Burner
Side Rings ST-200
Bottom Ring ST-201
Modified Chutes
28 5/8" x 17" Opening in Hopper
Section Through Fire Pan Draft Rings Looking Forward
Series FDS 7-R
Temp. Steam to Cyls.
Boiler Eff incl. FWH
Boiler Eff less FWH
Temp Exhaust Steam
Smokebox Temp
Water to Boiler
Water to FWH
Excess Air
Exhaust Nozzle Pressure
Firebox Draft
Steam Temp - °F
Boiler Efficiency - %
Smokebox Temp - °F
Water Rates 1000 Lbs. per Hour
Excess Air - %
Exhaust Nozzle Pressure - PSIG
Firebox Draft
Firing Rate - 1000 Lbs. Oil per Hour
Standing Test Plant, Sacramento
Standing Test Engine 4401
June 15, 1949

Fig. 4-54

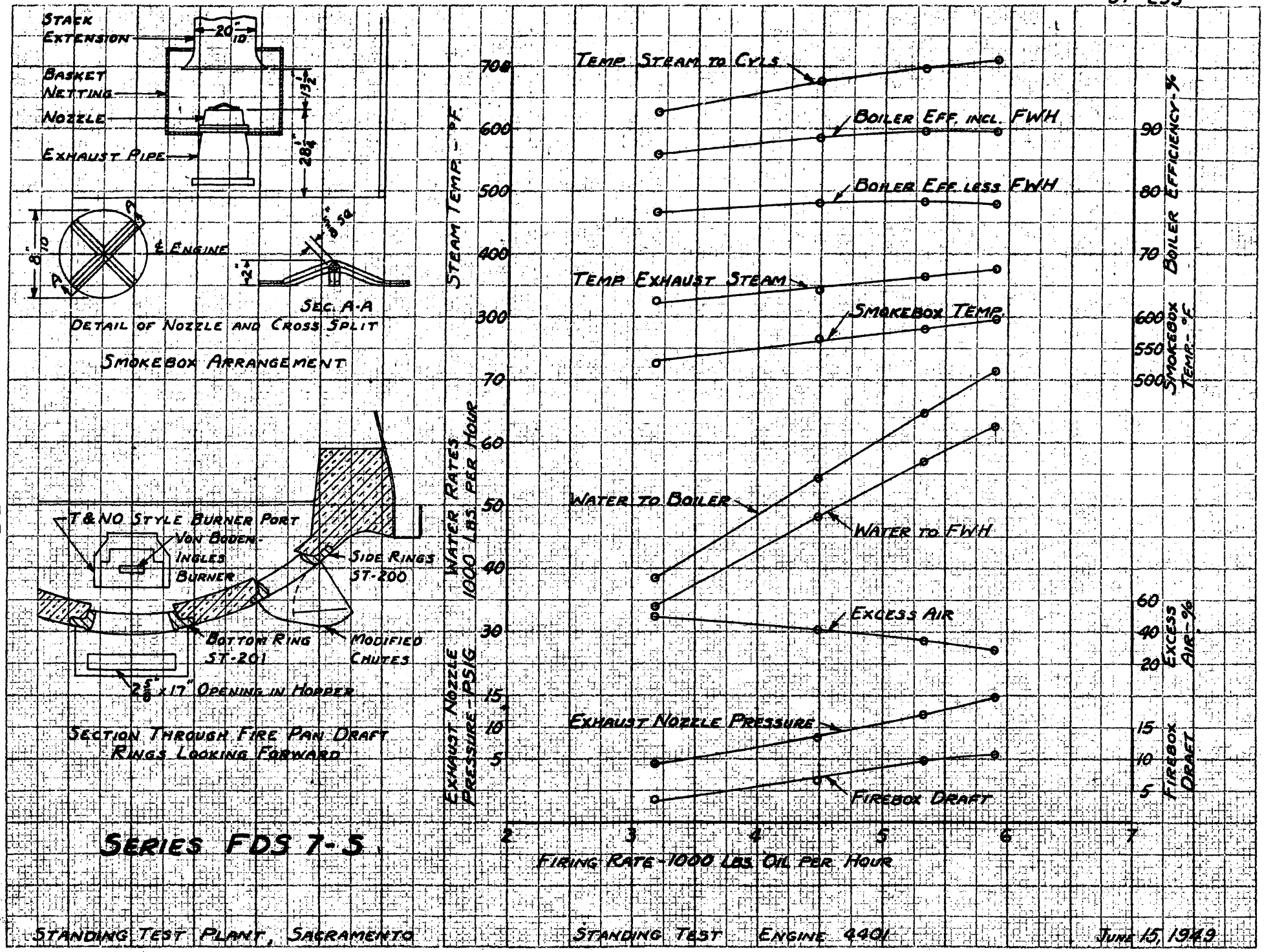

Series FDS 7-5

Standing Test Plant, Sacramento — Standing Test Engine 4401 — June 15, 1949

Fig. 4-55

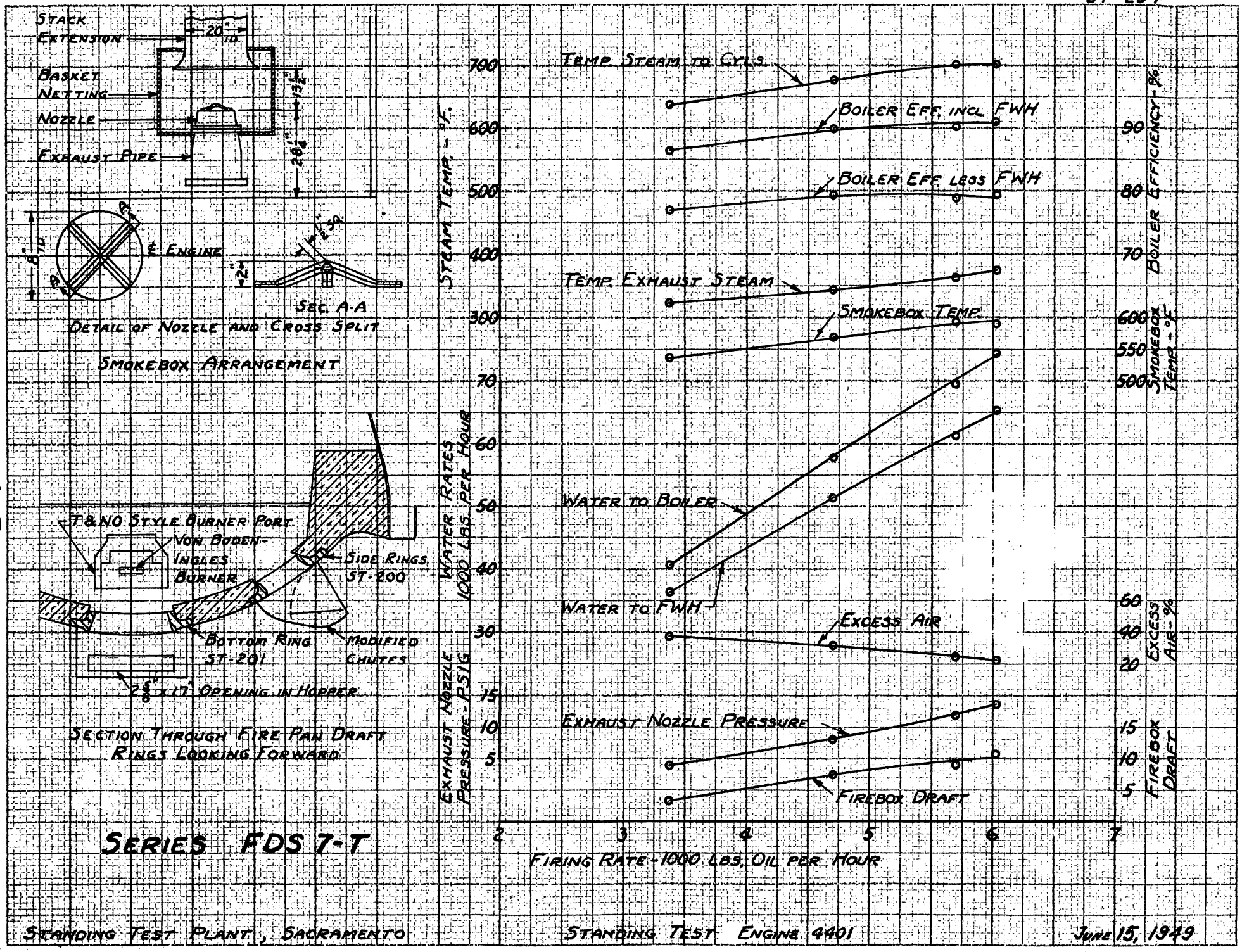

Fig. 4-56

Standing Test Plant, Sacramento — Standing Test Engine 4401 — June 15, 1949

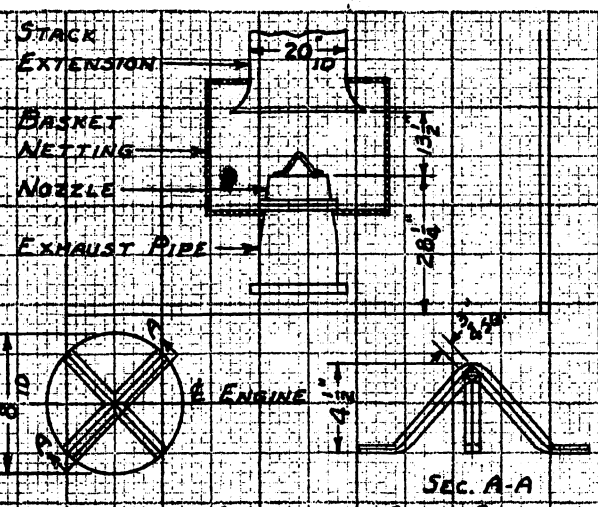

Detail of Nozzle and Cross Split

Smokebox Arrangement

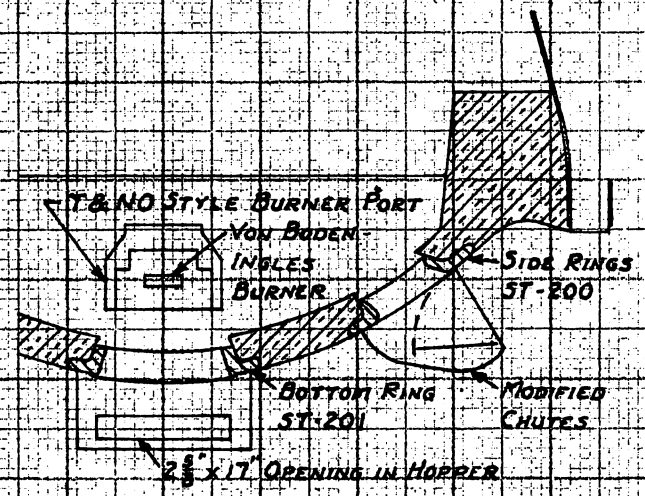

Section Through Fire Pan Draft Rings Looking Forward

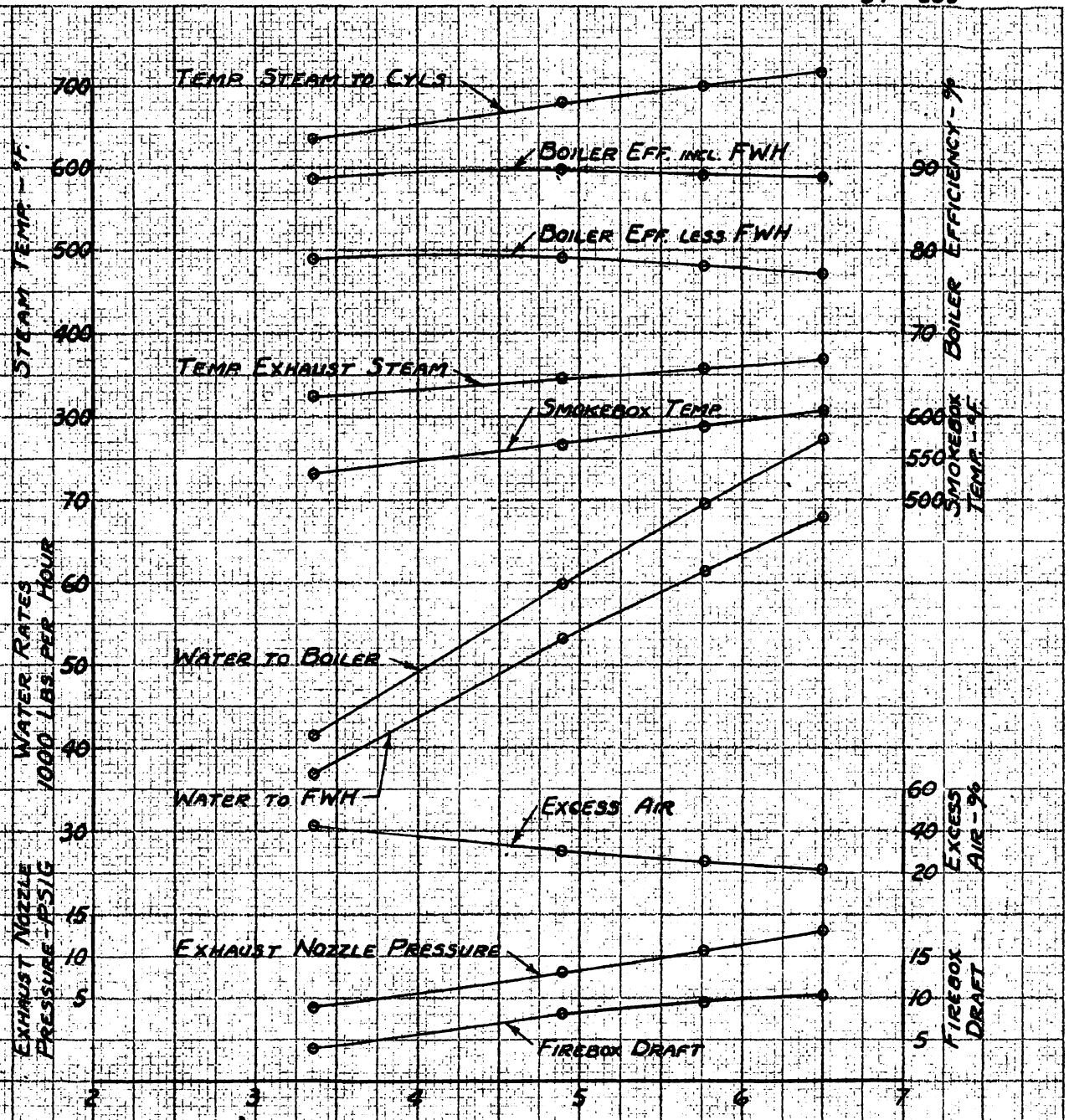

Fig. 4-57

Series FDS 7-U

Standing Test Plant, Sacramento — Standing Test Engine 4401 — June 15, 1949

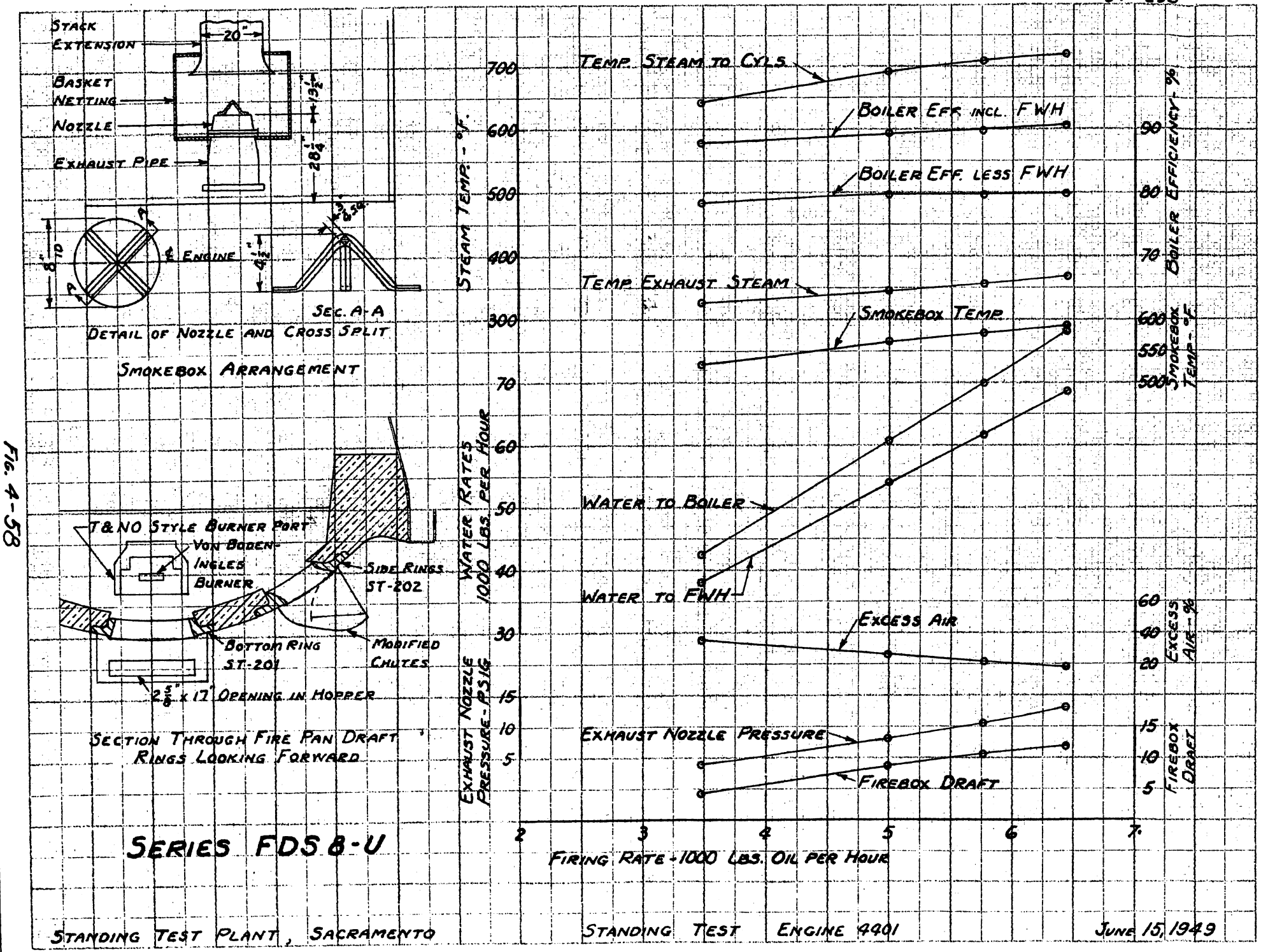
Stack Extension
20"
Basket Netting
Nozzle
Exhaust Pipe
13½"
28¼"
Engine
Sec. A-A
Detail of Nozzle and Cross Split
Smokebox Arrangement
T&NO Style Burner Port
Von Boden-Ingles Burner
Side Rings ST-202
Bottom Ring ST-201
Modified Chutes
2⅝" x 17" Opening in Hopper
Section Through Fire Pan Draft Rings Looking Forward
Series FDS 8-U
Steam Temp. - °F.
Water Rates 1000 Lbs. per Hour
Exhaust Nozzle Pressure - PSIG
Boiler Efficiency - %
Smokebox Temp. - °F.
Excess Air - %
Firebox Draft
Temp. Steam to Cyls.
Boiler Eff. incl. FWH
Boiler Eff. less FWH
Temp. Exhaust Steam
Smokebox Temp.
Water to Boiler
Water to FWH
Excess Air
Exhaust Nozzle Pressure
Firebox Draft
Firing Rate - 1000 Lbs. Oil per Hour
Standing Test Plant, Sacramento
Standing Test Engine 4401
June 15, 1949

Fig. 4-58

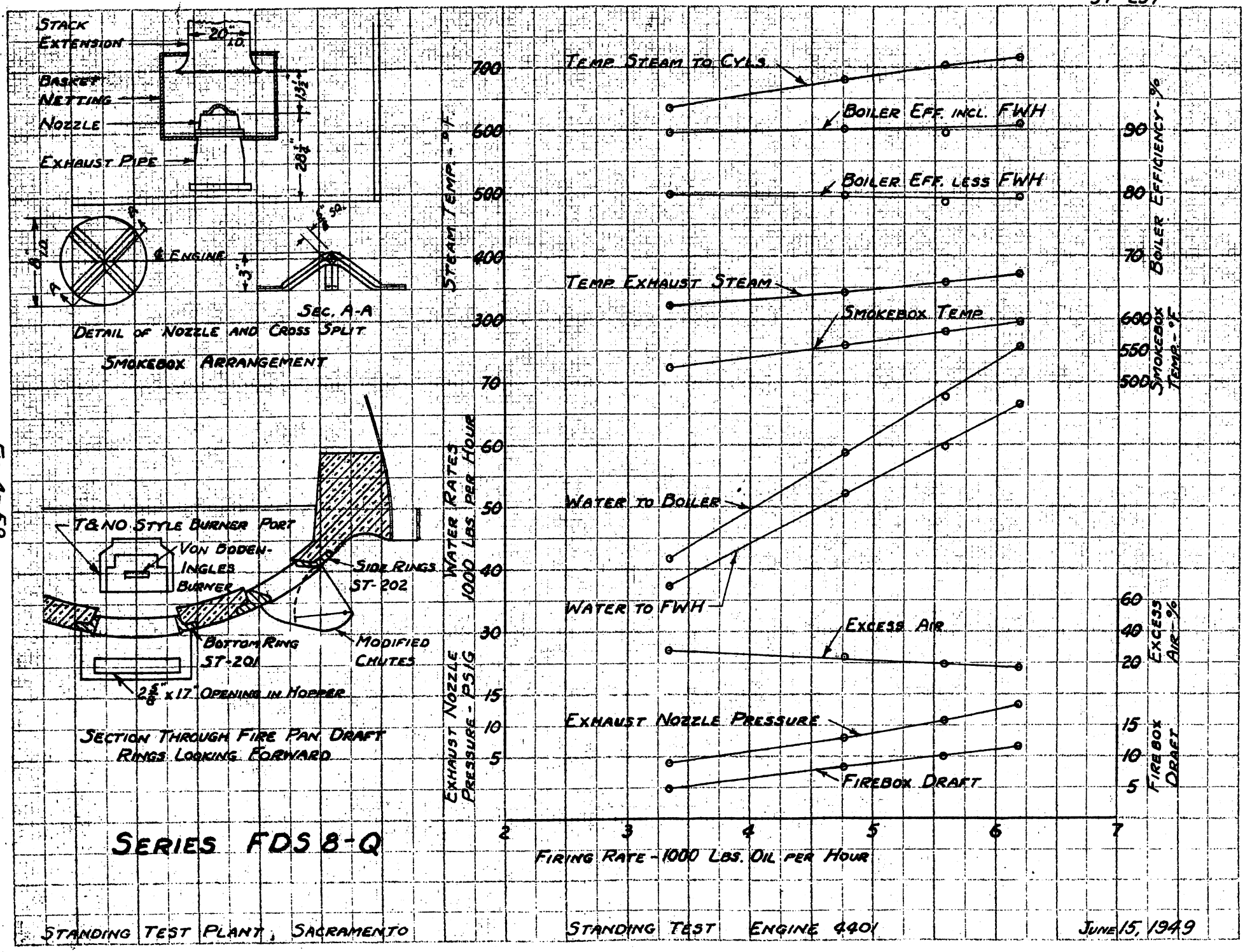

Fig. 4-59

Standing Test Plant, Sacramento — Standing Test Engine 4401 — June 15, 1949

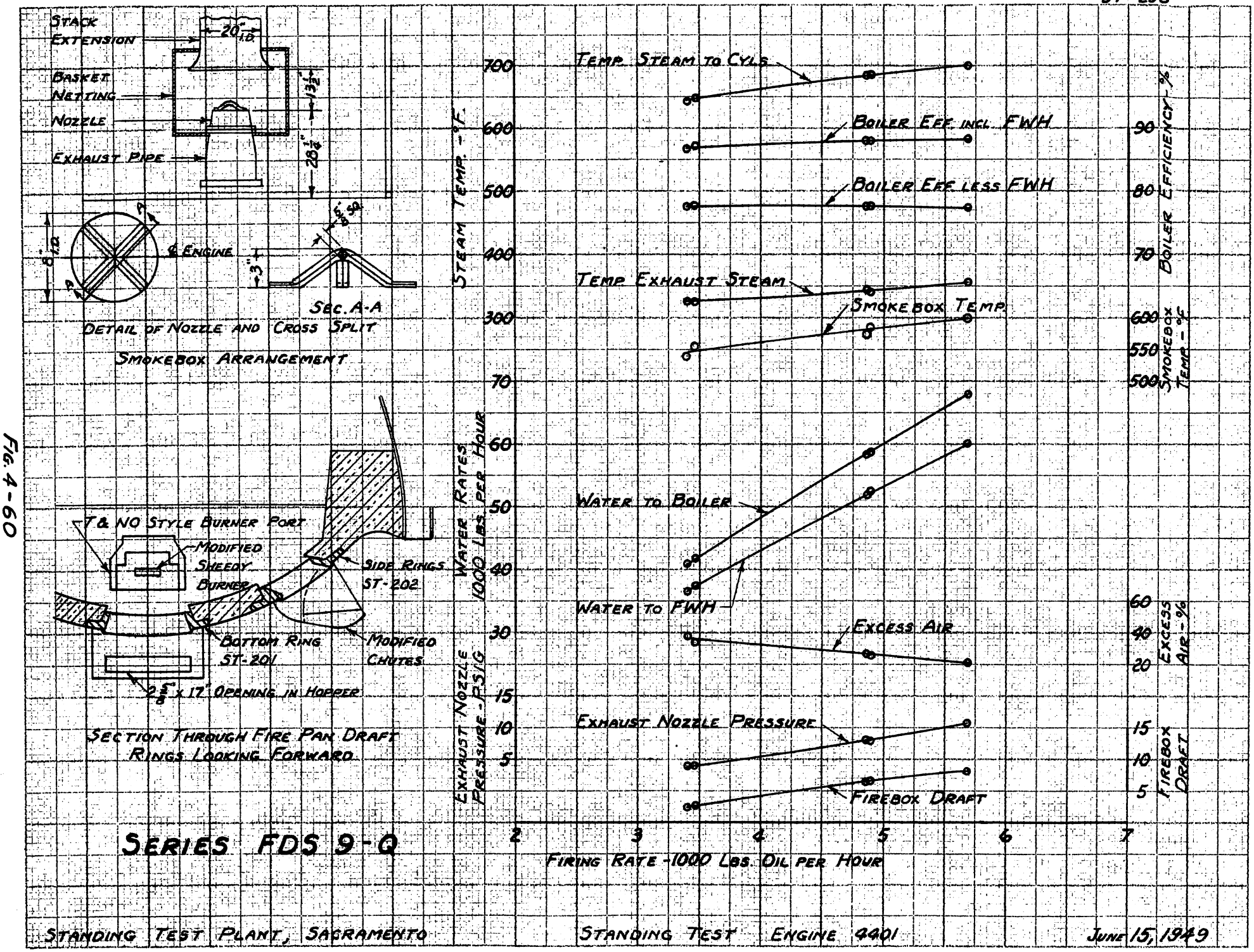
Stack Extension
20" I.D.
Basket Netting
Nozzle
Exhaust Pipe
13½"
28½"
8" I.D.
℄ Engine
3"
Sec. A-A
Detail of Nozzle and Cross Split
Smokebox Arrangement
T & NO Style Burner Port
Modified Sheedy Burner
Side Rings ST-202
Bottom Ring ST-201
Modified Chutes
2⅝" x 17" Opening in Hopper
Section Through Fire Pan Draft Rings Looking Forward
Series FDS 9-Q
Steam Temp. - °F.
Water Rates 1000 Lbs. per Hour
Exhaust Nozzle Pressure - PSIG
Temp. Steam to Cyls.
Boiler Eff. incl. FWH
Boiler Eff. less FWH
Temp. Exhaust Steam
Smokebox Temp.
Water to Boiler
Water to FWH
Excess Air
Exhaust Nozzle Pressure
Firebox Draft
Boiler Efficiency - %
Smokebox Temp. - °F.
Excess Air - %
Firebox Draft
Firing Rate - 1000 Lbs. Oil per Hour
Standing Test Plant, Sacramento
Standing Test Engine 4401
June 15, 1949

Fig. 4-60

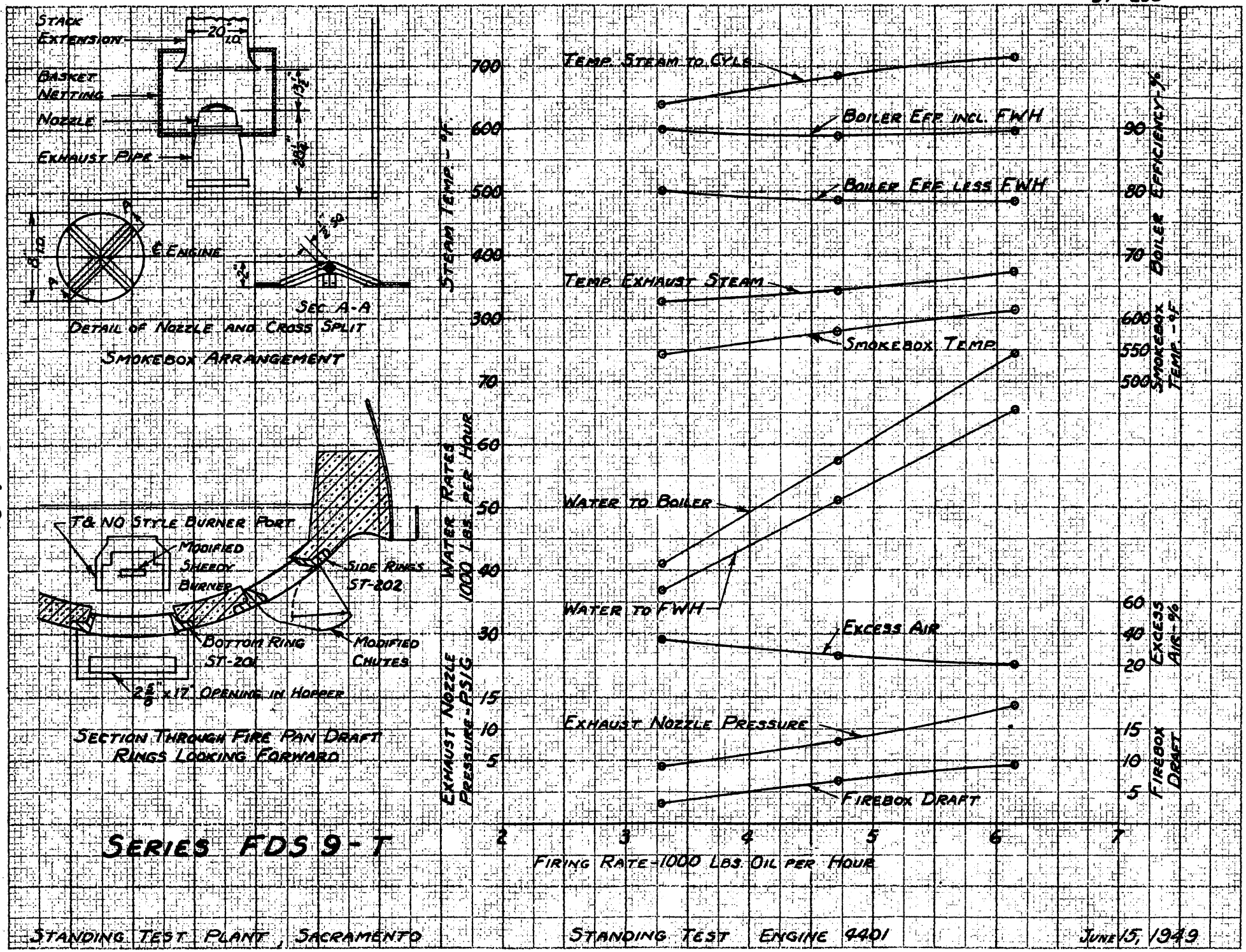
Stack Extension
Basket Netting
Nozzle
Exhaust Pipe
℄ Engine
Sec. A-A
Detail of Nozzle and Cross Split
Smokebox Arrangement
T&NO Style Burner Port
Modified Sheedy Burner
Side Rings ST-202
Bottom Ring ST-201
Modified Chutes
2 5/8" x 17" Opening in Hopper
Section Through Fire Pan Draft Rings Looking Forward
Series FDS 9-T
Temp. Steam to Cyls.
Boiler Eff. incl. FWH
Boiler Eff. less FWH
Temp. Exhaust Steam
Smokebox Temp.
Water to Boiler
Water to FWH
Excess Air
Exhaust Nozzle Pressure
Firebox Draft
Steam Temp. - °F
Water Rates 1000 Lbs. per Hour
Exhaust Nozzle Pressure - PSIG
Boiler Efficiency - %
Smokebox Temp. - °F
Excess Air - %
Firebox Draft
Firing Rate - 1000 Lbs. Oil per Hour
Standing Test Plant, Sacramento
Standing Test Engine 4401
June 15, 1949

Fig. 4-61

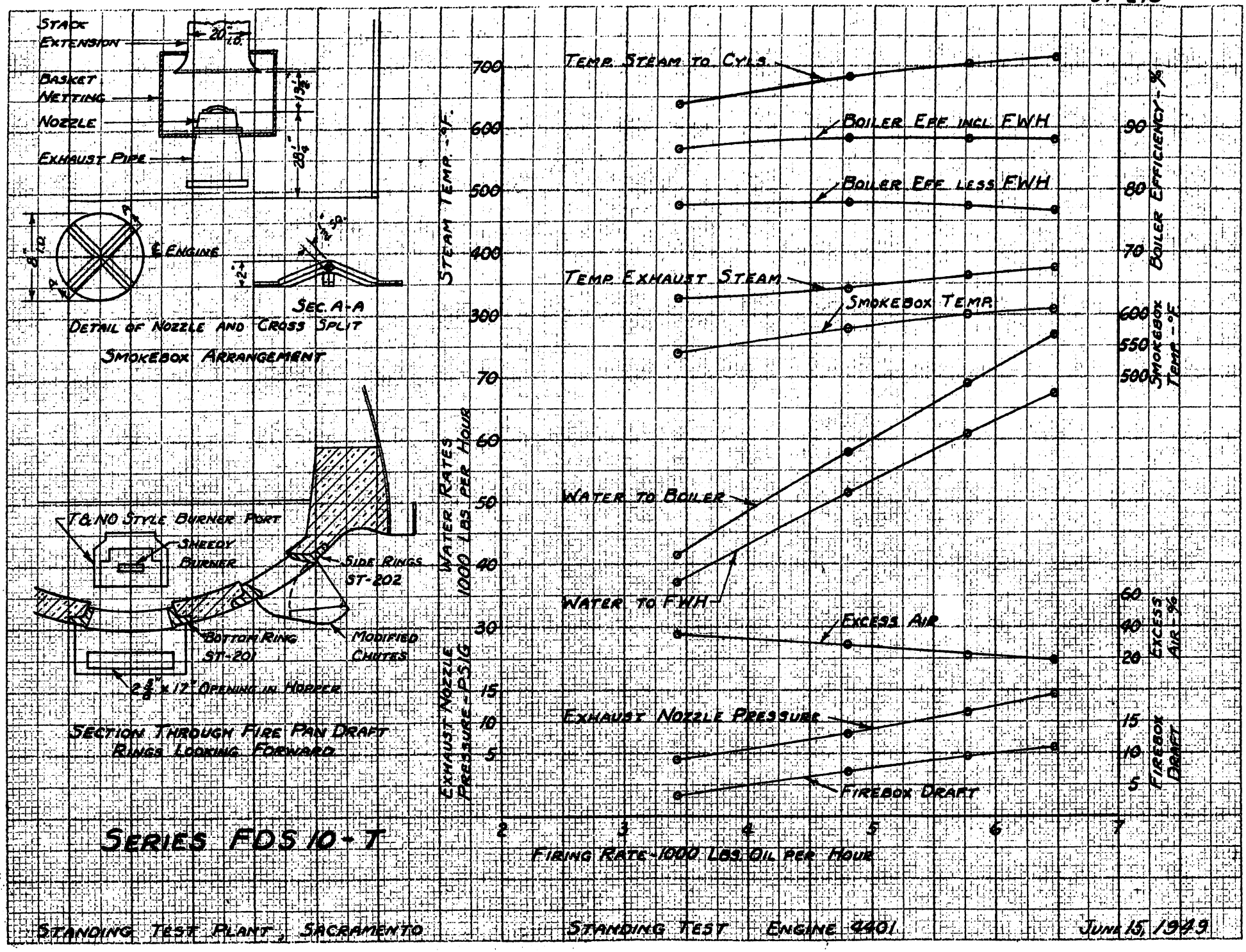
Stack Extension
20" I.D.
Basket Netting
Nozzle
Exhaust Pipe
℄ Engine
Sec. A-A
Detail of Nozzle and Cross Split
Smokebox Arrangement
T&NO Style Burner Port
Sheedy Burner
Side Rings ST-202
Bottom Ring ST-201
Modified Chutes
2 3/8" x 17" Opening in Hopper
Section Through Fire Pan Draft Rings Looking Forward
Series FDS 10-T
Steam Temp. - °F.
Water Rates 1000 Lbs. per Hour
Exhaust Nozzle Pressure - PSIG
Temp. Steam to Cyls.
Boiler Eff. incl. FWH
Boiler Eff. less FWH
Temp. Exhaust Steam
Smokebox Temp.
Water to Boiler
Water to FWH
Excess Air
Exhaust Nozzle Pressure
Firebox Draft
Boiler Efficiency - %
Smokebox Temp. - °F.
Excess Air - %
Firebox Draft
Firing Rate - 1000 Lbs. Oil per Hour
Standing Test Plant, Sacramento
Standing Test Engine 4401
June 15, 1949

Fig. 4-62

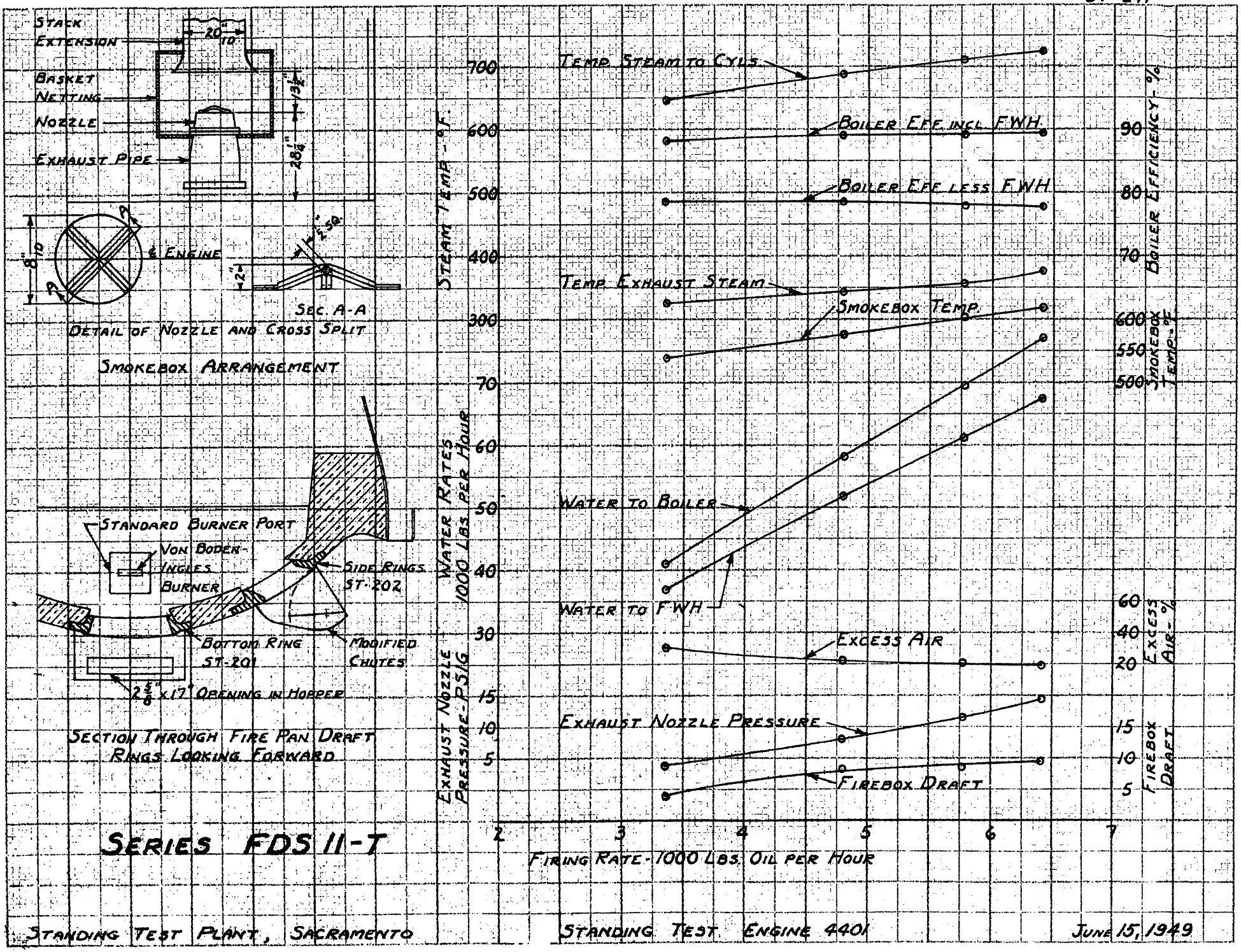
Stack Extension
Basket Netting
Nozzle
Exhaust Pipe
20"
10"
13½"
28¼"
℄ Engine
8"
10
2"
2.50"
Sec. A-A
Detail of Nozzle and Cross Split
Smokebox Arrangement
Standard Burner Port
Von Boden-Ingles Burner
Side Rings ST-202
Bottom Ring ST-201
Modified Chutes
2⅝" x 17" Opening in Hopper
Section Through Fire Pan Draft Rings Looking Forward
Series FDS 11-T
Steam Temp - °F.
Water Rates 1000 Lbs. per Hour
Exhaust Nozzle Pressure - PSIG
Temp. Steam to Cyls.
Boiler Eff. incl. FWH
Boiler Eff. less FWH
Temp. Exhaust Steam
Smokebox Temp.
Water to Boiler
Water to FWH
Excess Air
Exhaust Nozzle Pressure
Firebox Draft
Boiler Efficiency - %
Smokebox Temp. - °F
Excess Air - %
Firebox Draft
Firing Rate - 1000 Lbs. Oil per Hour
Standing Test Plant, Sacramento
Standing Test Engine 4401
June 15, 1949

Fig. 4-63

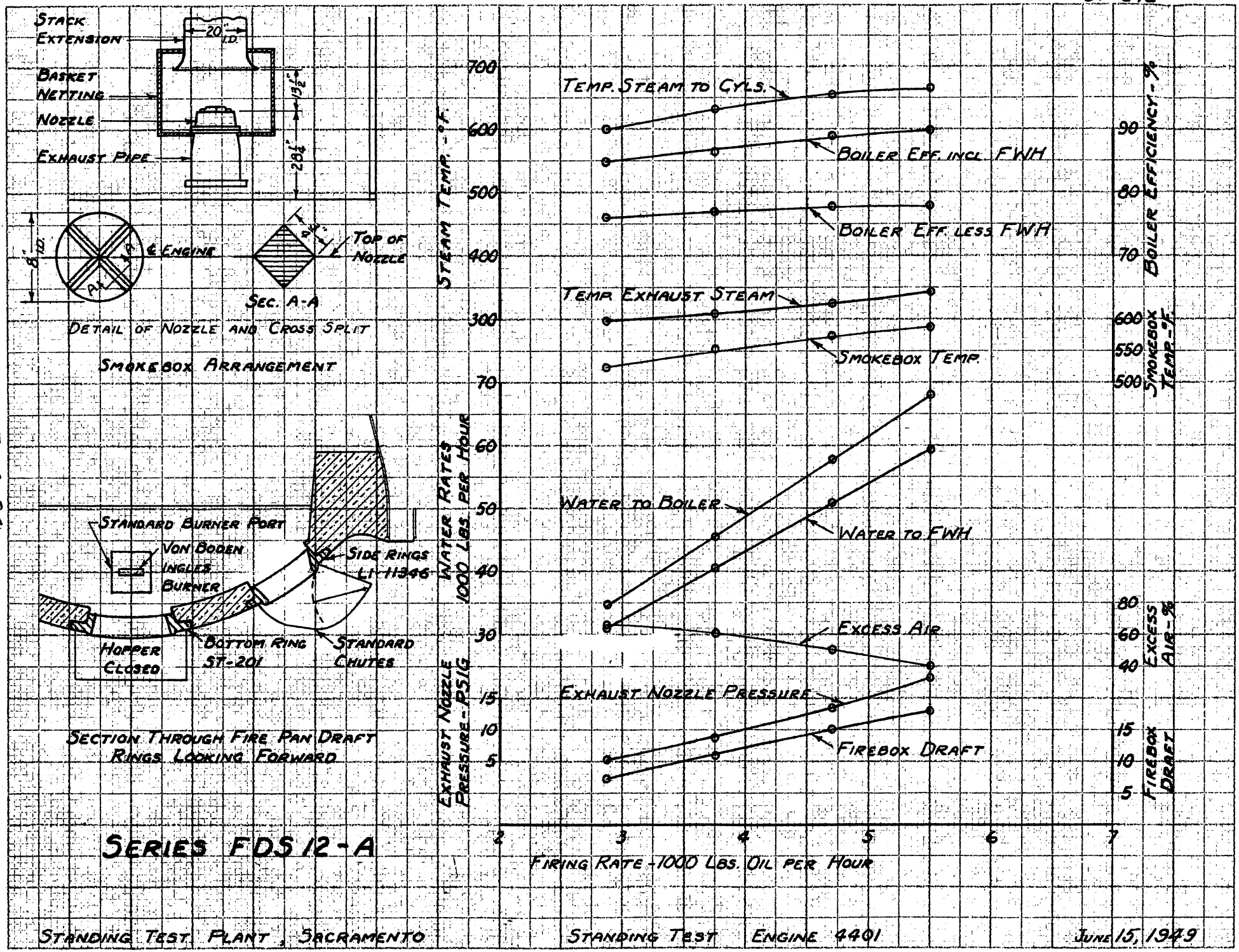
STACK EXTENSION
20" I.D.
BASKET NETTING
NOZZLE
EXHAUST PIPE
13½"
28¼"
8" I.D.
℄ ENGINE
A
A
TOP OF NOZZLE
SEC. A-A
DETAIL OF NOZZLE AND CROSS SPLIT
SMOKEBOX ARRANGEMENT
STANDARD BURNER PORT
VON BODEN INGLES BURNER
SIDE RINGS LI-11346
HOPPER CLOSED
BOTTOM RING ST-201
STANDARD CHUTES
SECTION THROUGH FIRE PAN DRAFT RINGS LOOKING FORWARD
SERIES FDS 12-A
STEAM TEMP. - °F.
700
600
500
400
300
WATER RATES 1000 LBS. PER HOUR
70
60
50
40
30
EXHAUST NOZZLE PRESSURE - PSIG
15
10
5
TEMP. STEAM TO CYLS.
BOILER EFF. INCL. FWH
BOILER EFF. LESS FWH
TEMP. EXHAUST STEAM
SMOKEBOX TEMP.
WATER TO BOILER
WATER TO FWH
EXCESS AIR
EXHAUST NOZZLE PRESSURE
FIREBOX DRAFT
BOILER EFFICIENCY - %
90
80
70
SMOKEBOX TEMP. - °F.
600
550
500
EXCESS AIR - %
80
60
40
FIREBOX DRAFT
15
10
5
2
3
4
5
6
7
FIRING RATE - 1000 LBS. OIL PER HOUR
STANDING TEST PLANT, SACRAMENTO
STANDING TEST ENGINE 4401
JUNE 15, 1949

FIG. 4-64

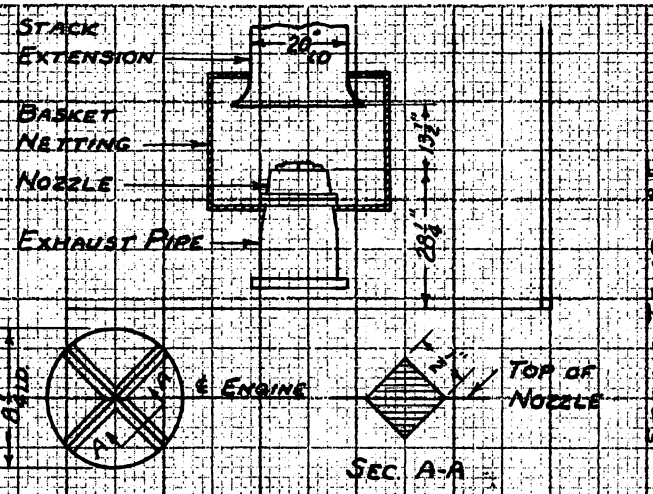

Detail of Nozzle and Cross Split

Smokebox Arrangement

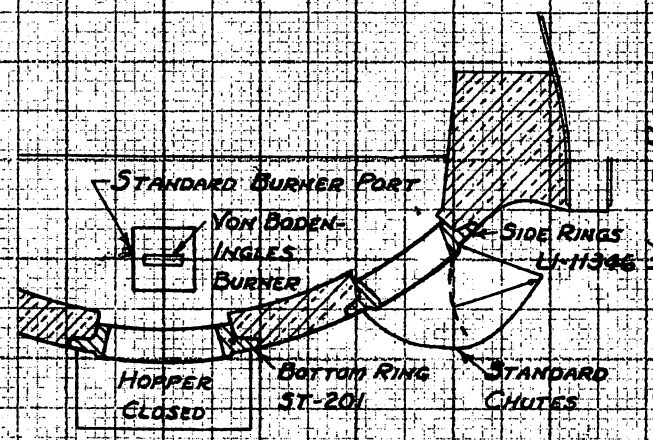

Section Through Fire Pan Draft Rings Looking Forward

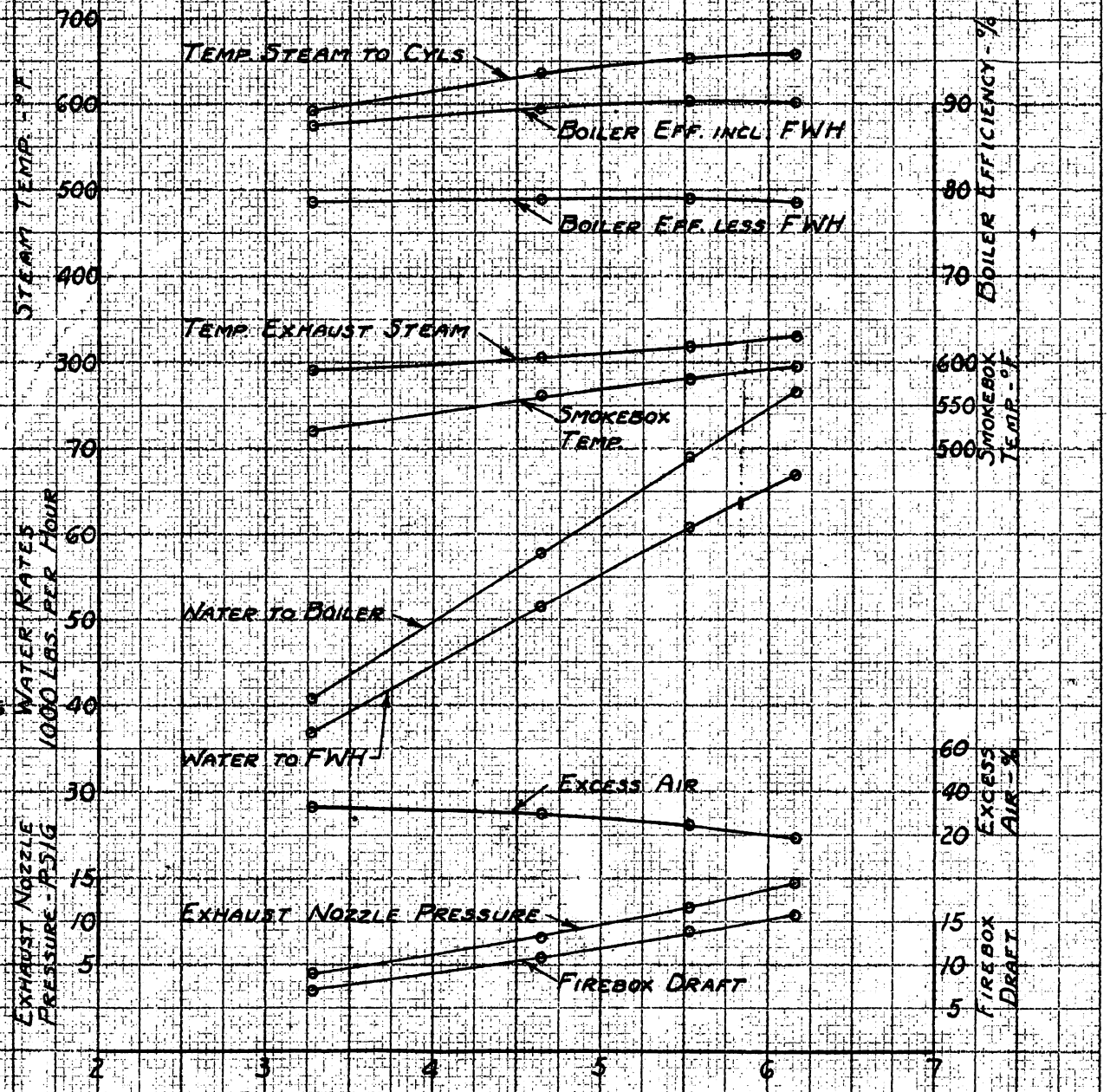

Fig. 4-65

Series FDS 12-P

Standing Test Plant, Sacramento — Standing Test Engine 4401 — June 15, 1949

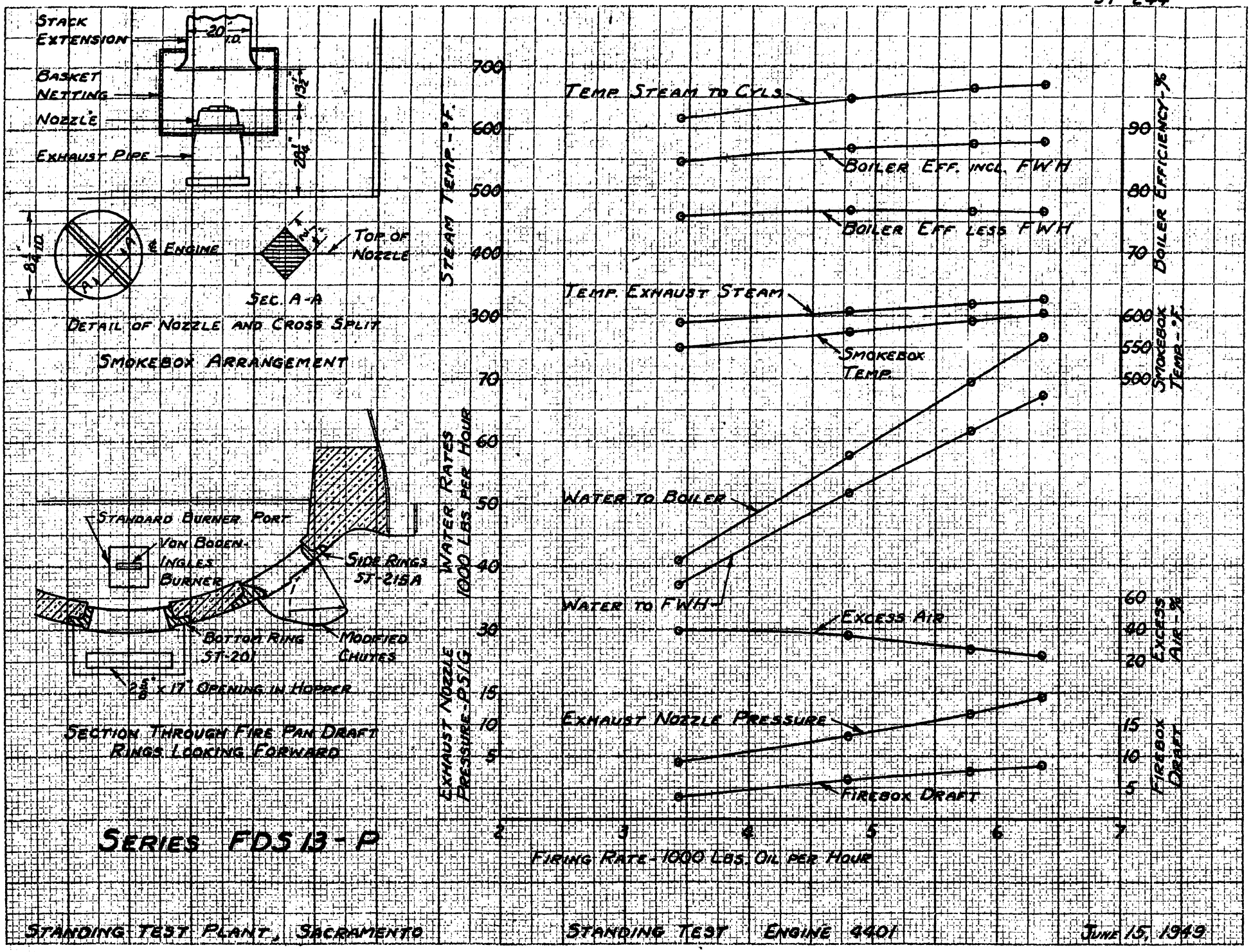
Stack Extension
20" I.D.
Basket Netting
Nozzle
Exhaust Pipe
13½"
28½"
8¾" I.D.
℄ Engine
Top of Nozzle
Sec. A-A
Detail of Nozzle and Cross Split
Smokebox Arrangement
Standard Burner Port
Von Boden-Ingles Burner
Side Rings ST-215A
Bottom Ring ST-201
Modified Chutes
2⅜" x 17" Opening in Hopper
Section Through Fire Pan Draft Rings Looking Forward
Series FDS13-P
Steam Temp.-°F.
Water Rates 1000 Lbs. per Hour
Exhaust Nozzle Pressure-PSIG
Temp. Steam to Cyls.
Boiler Eff. incl. FWH
Boiler Eff less FWH
Temp. Exhaust Steam
Smokebox Temp.
Water to Boiler
Water to FWH
Excess Air
Exhaust Nozzle Pressure
Firebox Draft
Boiler Efficiency-%
Smokebox Temp.-°F.
Excess Air-%
Firebox Draft
Firing Rate-1000 Lbs. Oil per Hour
Standing Test Plant, Sacramento
Standing Test Engine 4401
June 15, 1949

Fig. 4-66

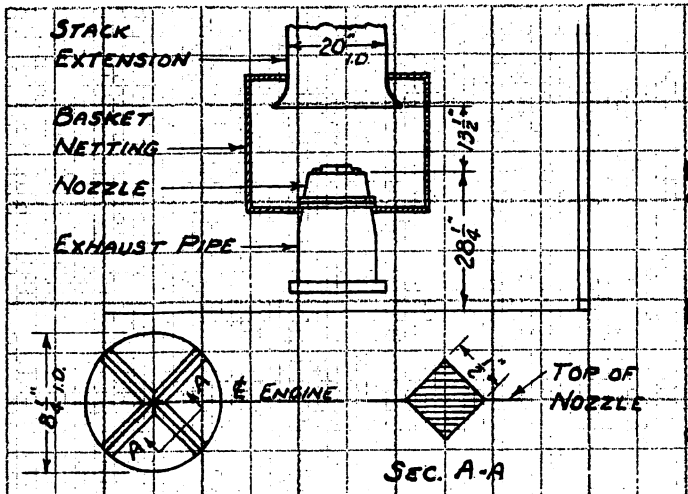

DETAIL OF NOZZLE AND CROSS SPLIT

SMOKEBOX ARRANGEMENT

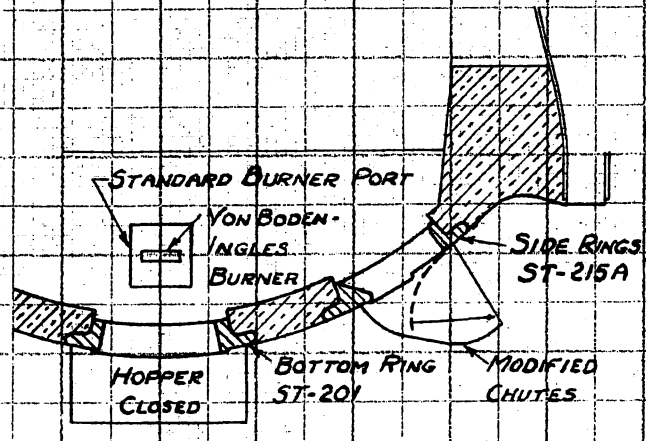

SECTION THROUGH FIRE PAN DRAFT RINGS LOOKING FORWARD

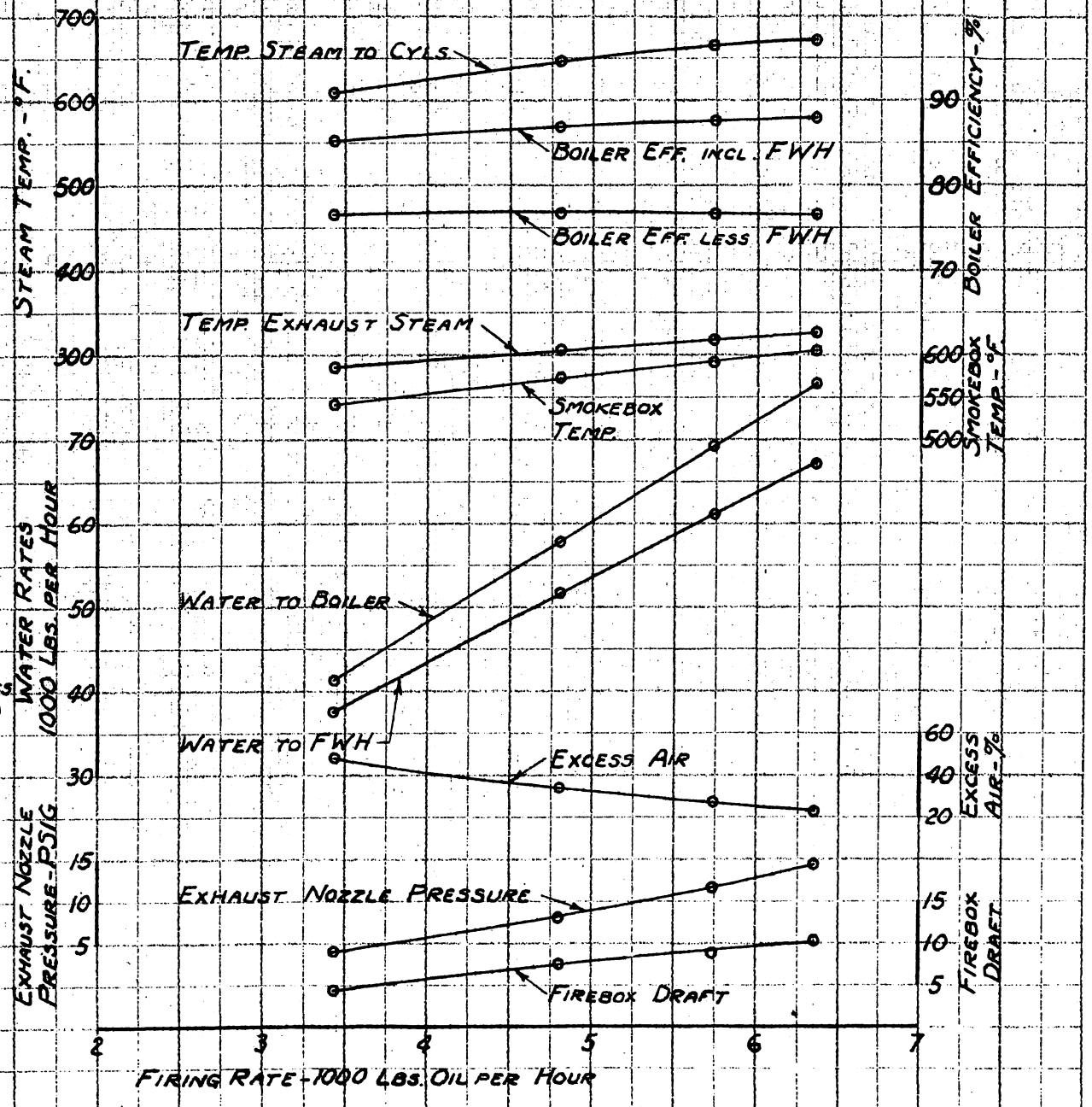

FIG. 4-67

SERIES FDS 14-P

STANDING TEST PLANT, SACRAMENTO

STANDING TEST ENGINE 4401

JUNE 15, 1949

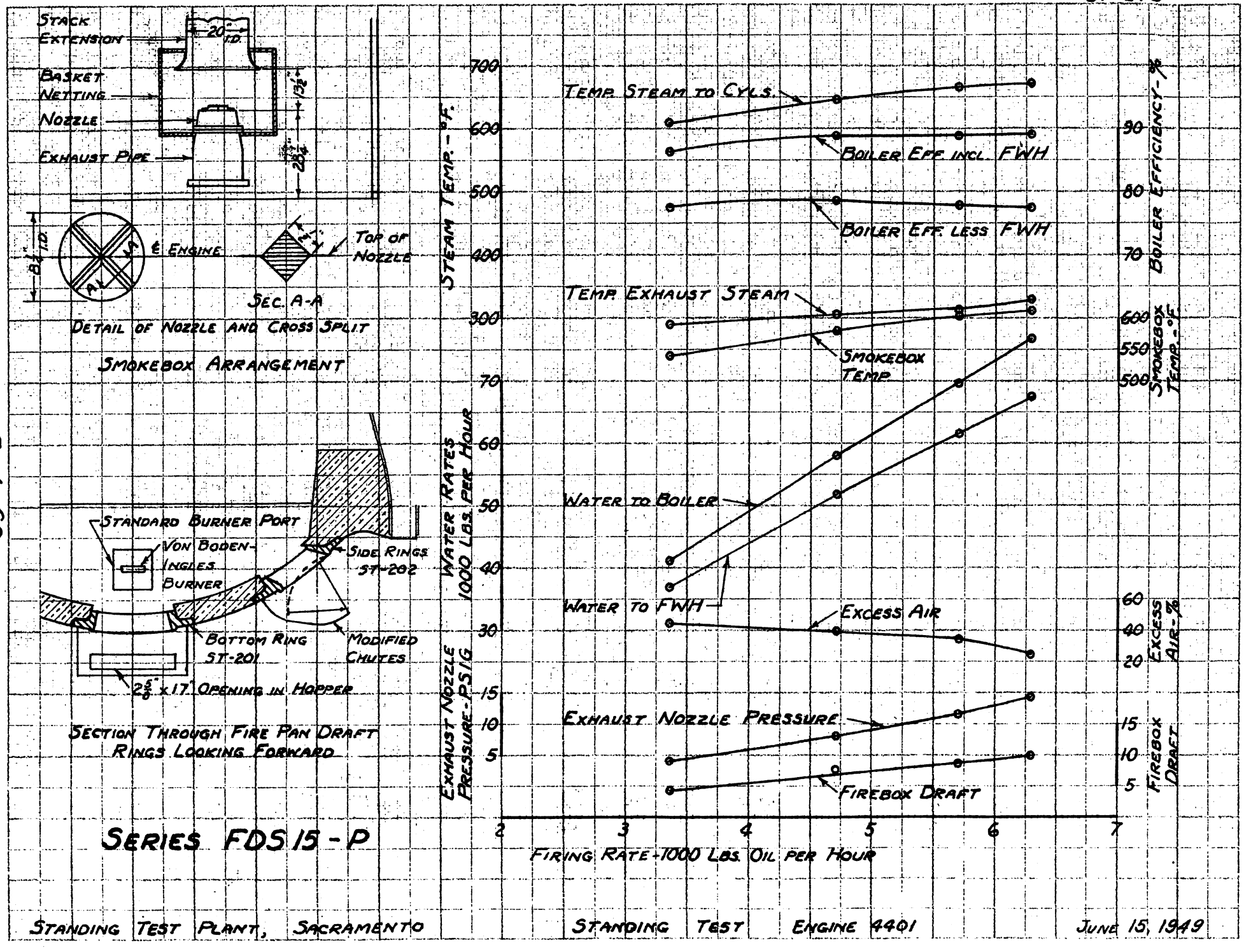

Fig. 4-68

Standing Test Plant, Sacramento — Standing Test Engine 4401 — June 15, 1949

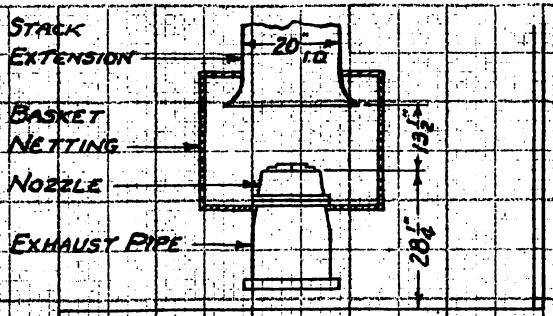

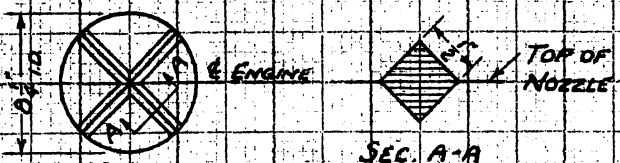

SEC. A-A

DETAIL OF NOZZLE AND CROSS SPLIT

SMOKEBOX ARRANGEMENT

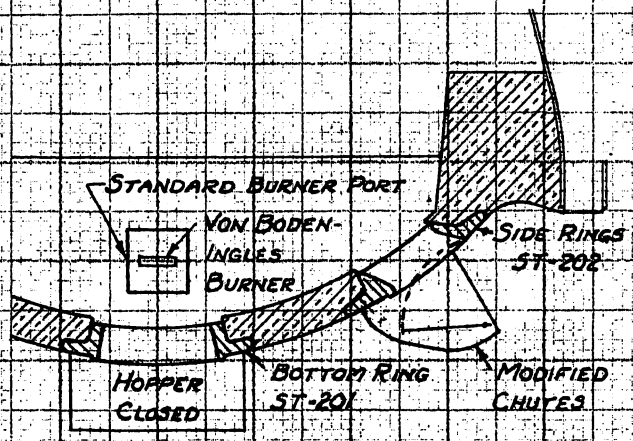

SECTION THROUGH FIRE PAN DRAFT RINGS LOOKING FORWARD

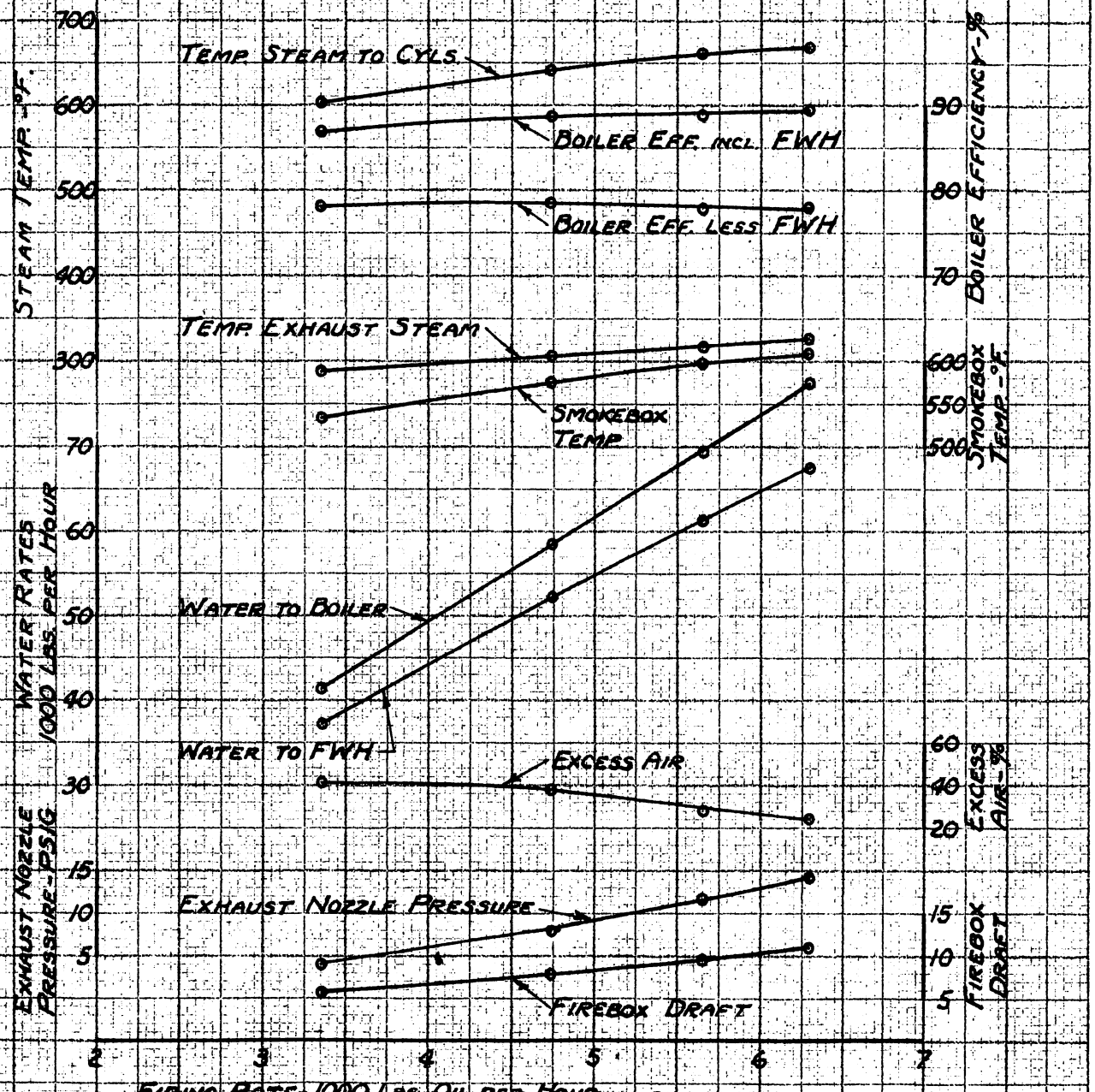

SERIES FDS 16-P

FIG. 4-69

STANDING TEST PLANT, SACRAMENTO

STANDING TEST ENGINE 4401

JUNE 15, 1949

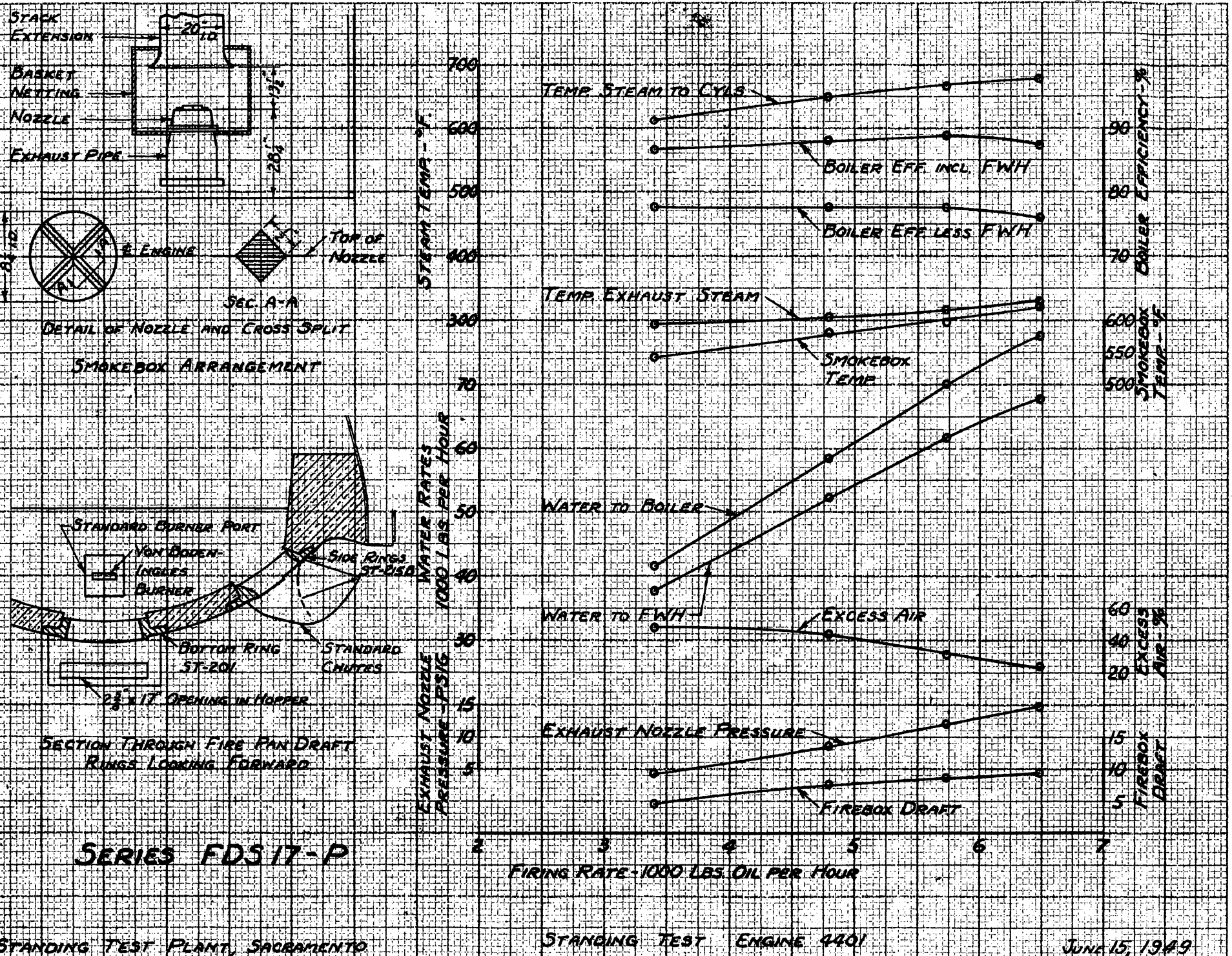

Fig. 4-70

Standing Test Plant, Sacramento

Standing Test Engine 4401

June 15, 1949

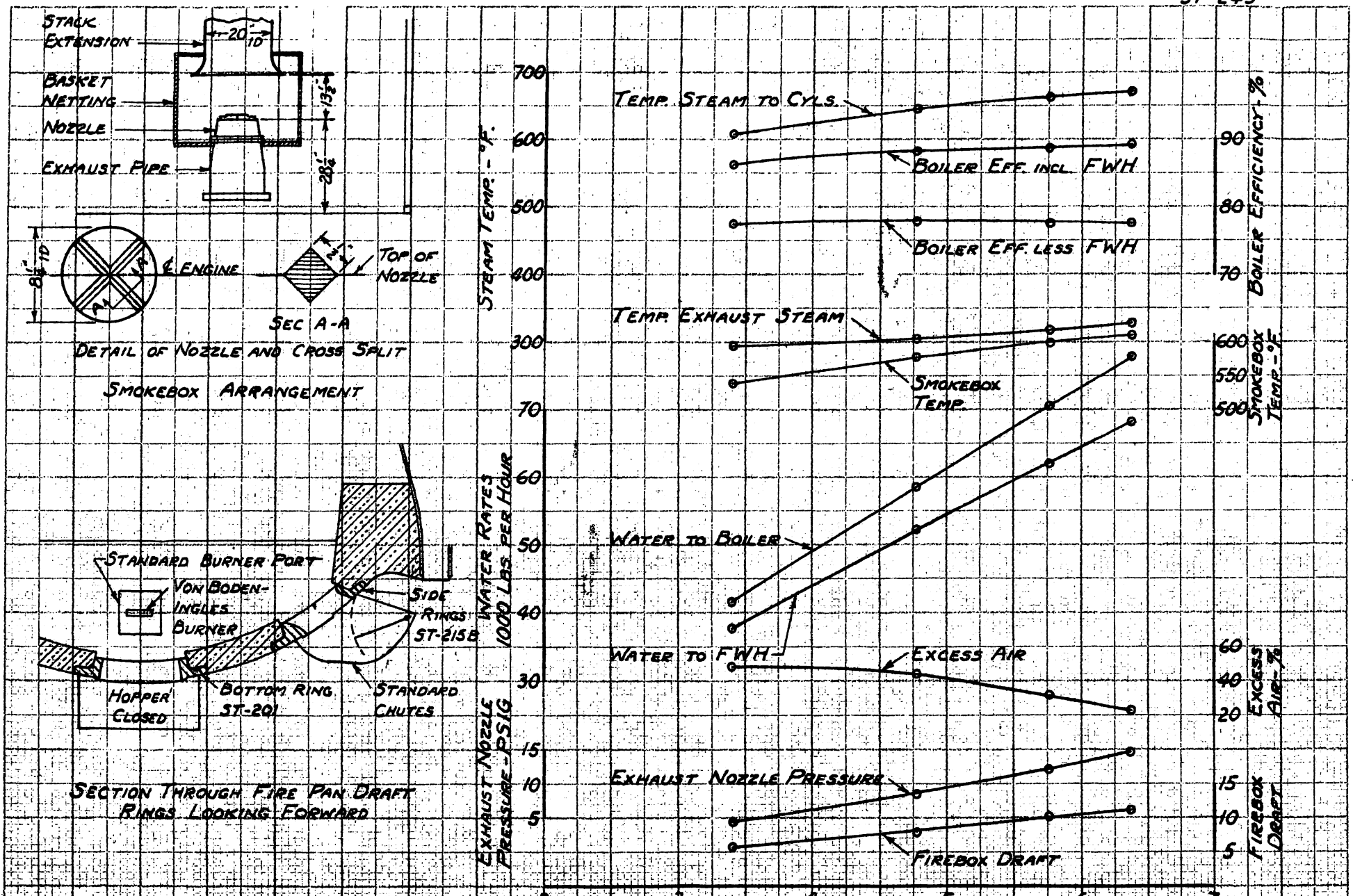

Fig. 4-71

STANDING TEST PLANT, SACRAMENTO — STANDING TEST ENGINE 4401 — JUNE 15, 1949

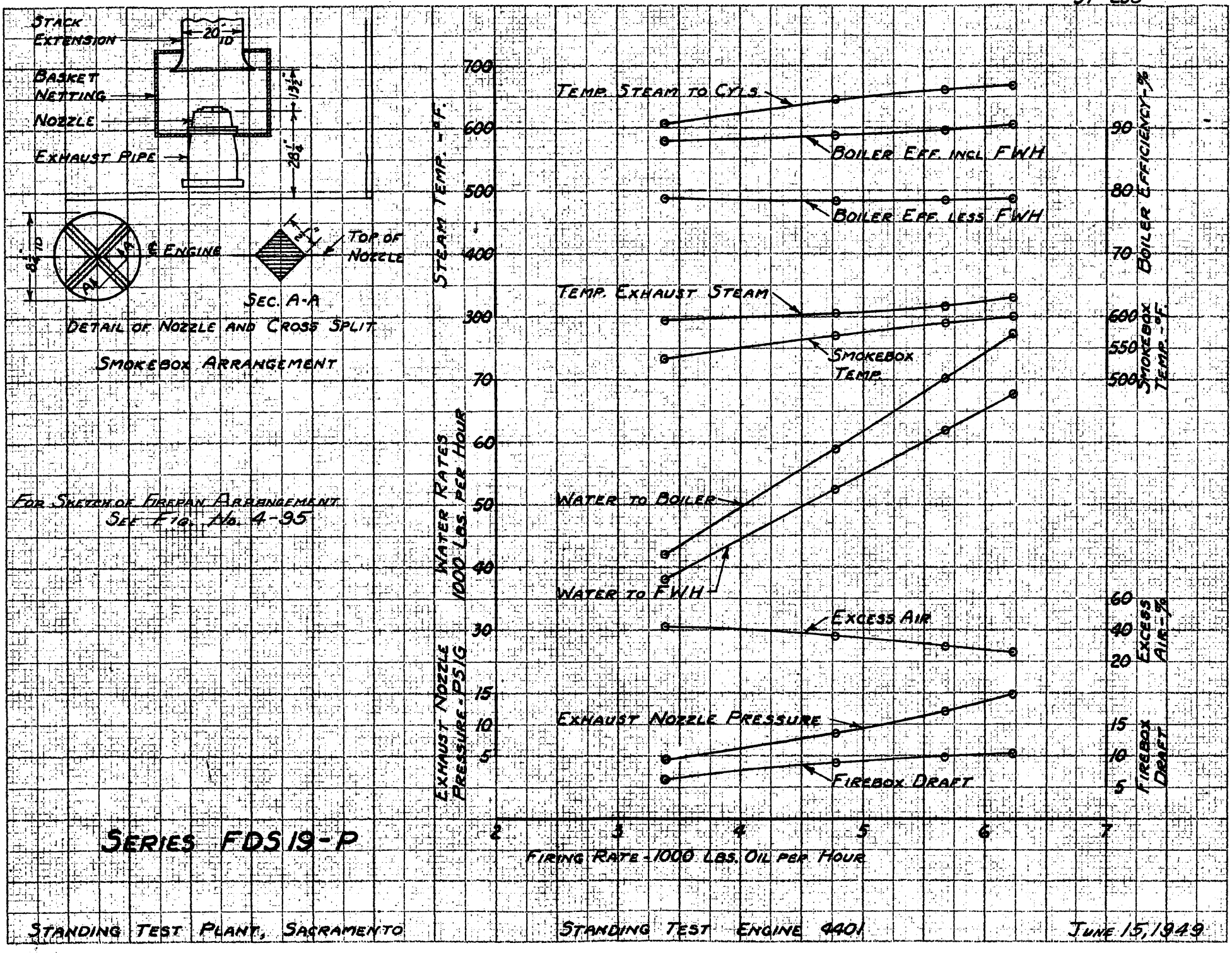

Series FDS19-P

Standing Test Plant, Sacramento — Standing Test Engine 4401 — June 15, 1949

Fig. 4-72

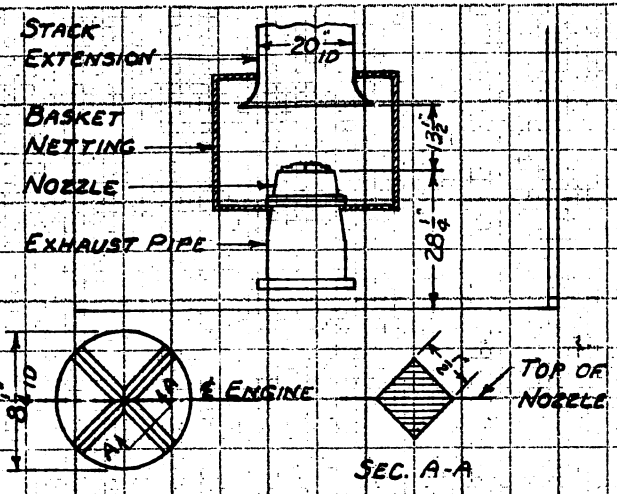

DETAIL OF NOZZLE AND CROSS SPLIT

SMOKEBOX ARRANGEMENT

FOR SKETCH OF FIREPAN ARRANGEMENT SEE FIG. NO. 4-96

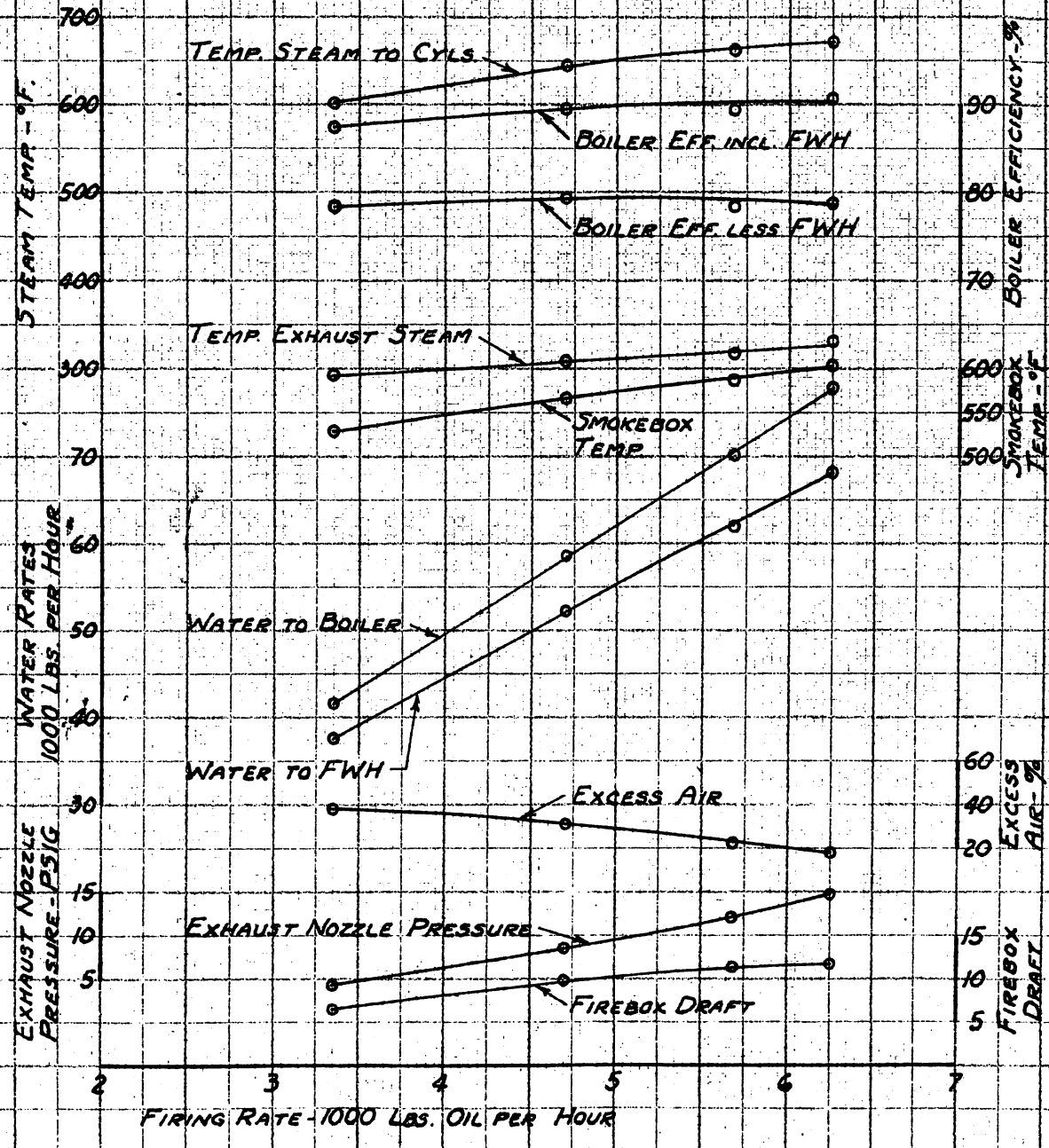

SERIES FDS 20-P

FIG. 4-73

STANDING TEST PLANT, SACRAMENTO — STANDING TEST ENGINE 4401 — JUNE 15, 1949

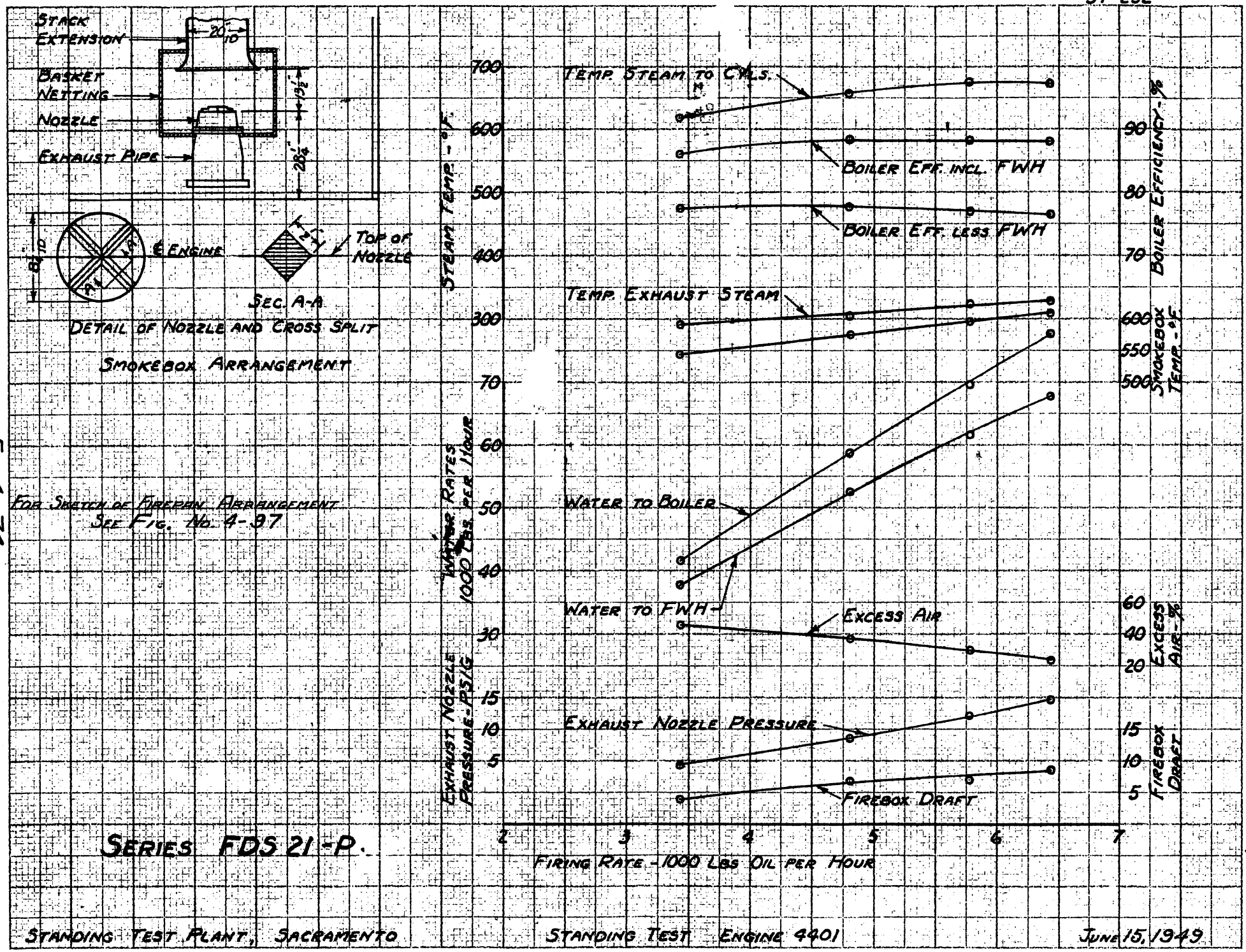

Series FDS 21-P.

Standing Test Plant, Sacramento — Standing Test Engine 4401 — June 15, 1949

Fig. 4-74

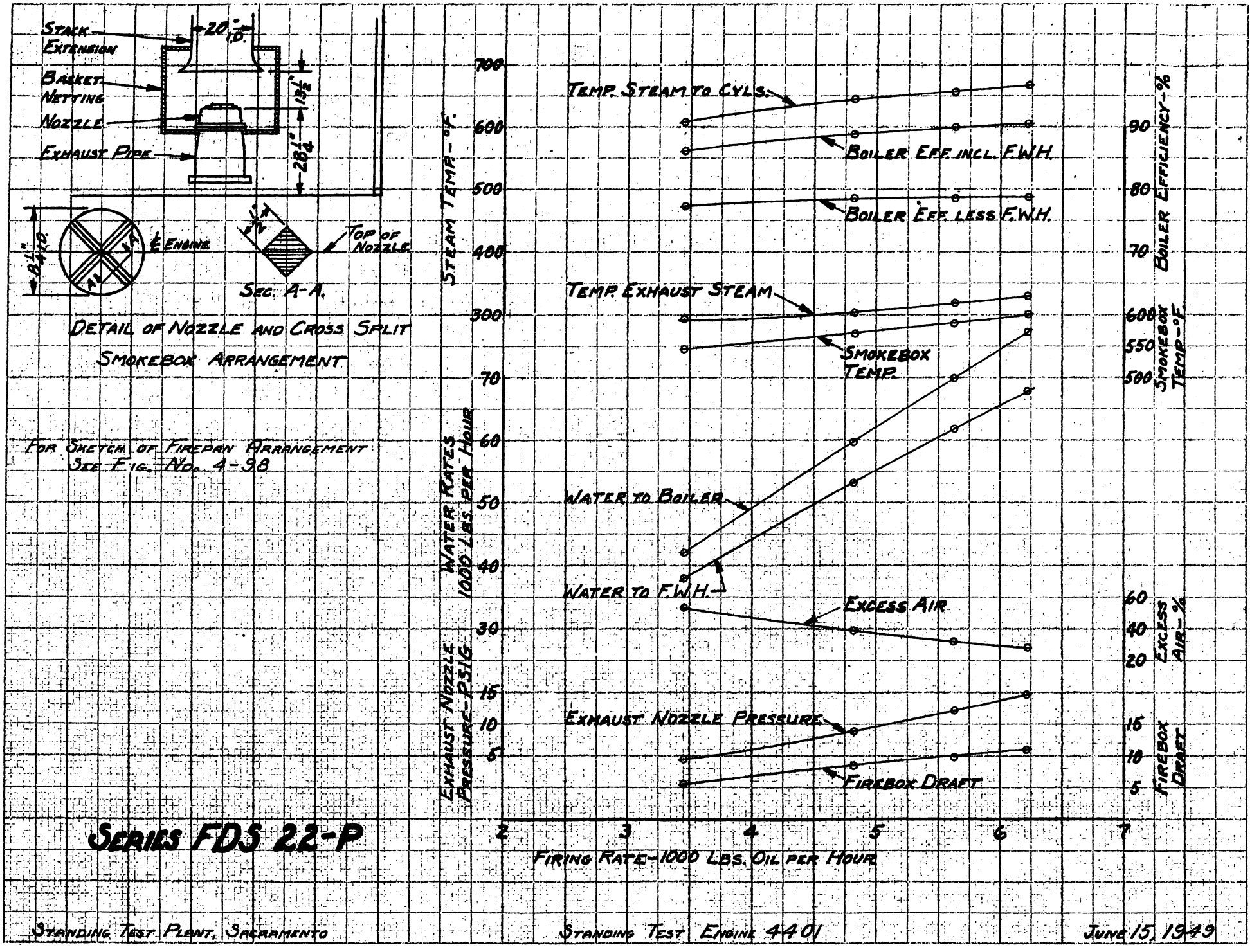
STACK EXTENSION
20" I.D.
BASKET NETTING
NOZZLE
EXHAUST PIPE
13½"
28¼"
8¼" O.D.
℄ ENGINE
TOP OF NOZZLE
SEC. A-A.
DETAIL OF NOZZLE AND CROSS SPLIT SMOKEBOX ARRANGEMENT
FOR SKETCH OF FIREPAN ARRANGEMENT SEE FIG. NO. 4-98
STEAM TEMP.-°F.
700
600
500
400
300
WATER RATES 1000 LBS. PER HOUR
70
60
50
40
30
EXHAUST NOZZLE PRESSURE-PSIG
15
10
5
TEMP. STEAM TO CYLS.
BOILER EFF. INCL. F.W.H.
BOILER EFF. LESS F.W.H.
TEMP. EXHAUST STEAM
SMOKEBOX TEMP.
WATER TO BOILER
WATER TO F.W.H.
EXCESS AIR
EXHAUST NOZZLE PRESSURE
FIREBOX DRAFT
BOILER EFFICIENCY-%
90
80
70
SMOKEBOX TEMP.-°F.
600
550
500
EXCESS AIR-%
60
40
20
FIREBOX DRAFT
15
10
5
2
3
4
5
6
7
FIRING RATE-1000 LBS. OIL PER HOUR
SERIES FDS 22-P
STANDING TEST PLANT, SACRAMENTO
STANDING TEST ENGINE 4401
JUNE 15, 1949

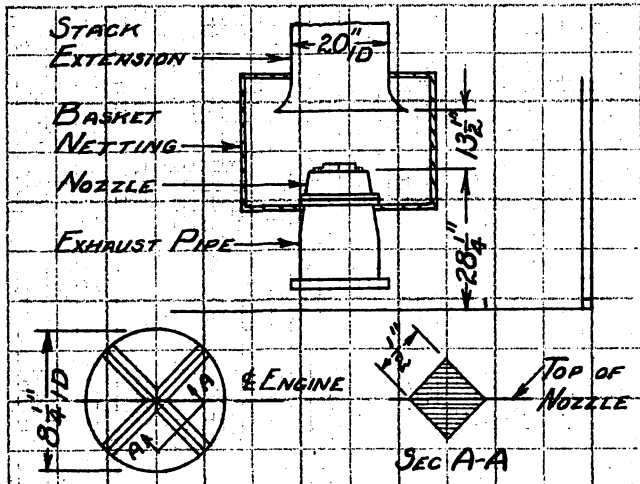

Detail of Nozzle and Cross Split

Smokebox Arrangement

For Sketch of Firepan Arrangement
See Fig. No. 4-39

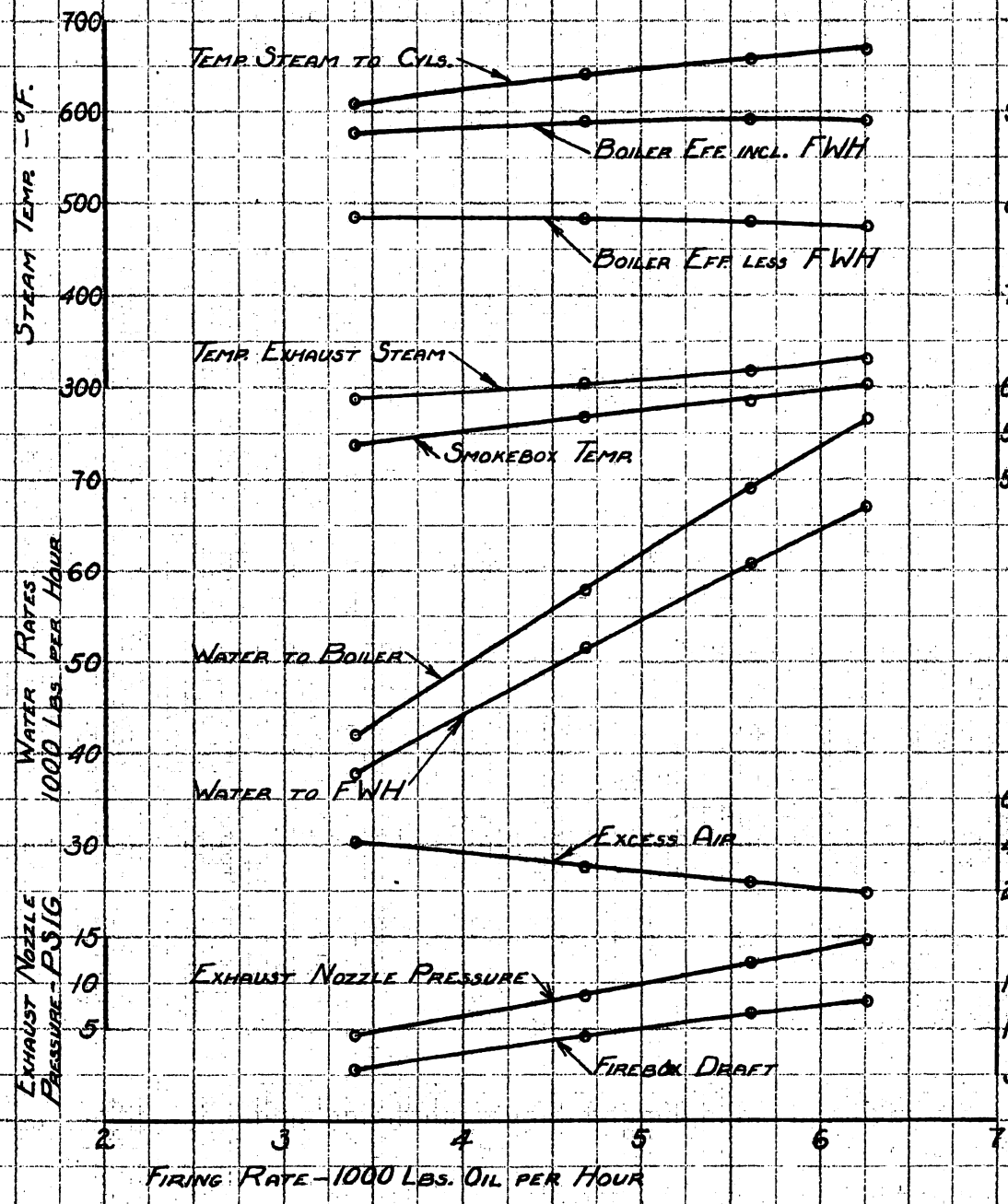

Fig. 4-76

Series FDS 23-P

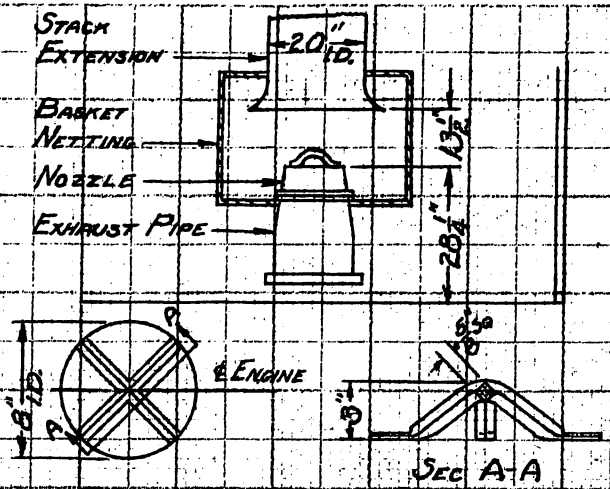

Detail of Nozzle and Cross Split

Smokebox Arrangement

For Sketch of Firepan Arrangement
See Fig. No. 4-100

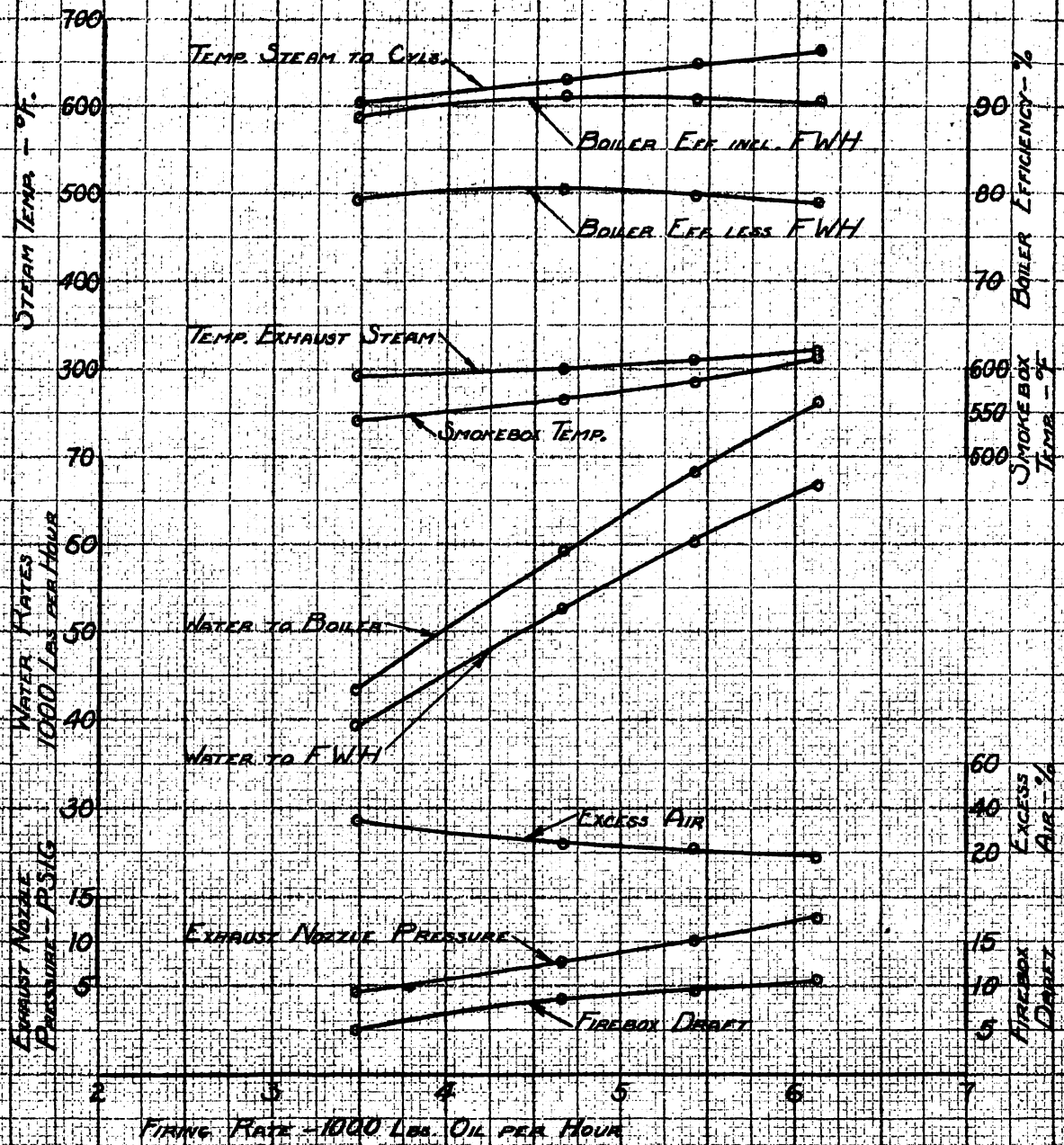

Fig. 4-77

Series FDS 24-Q

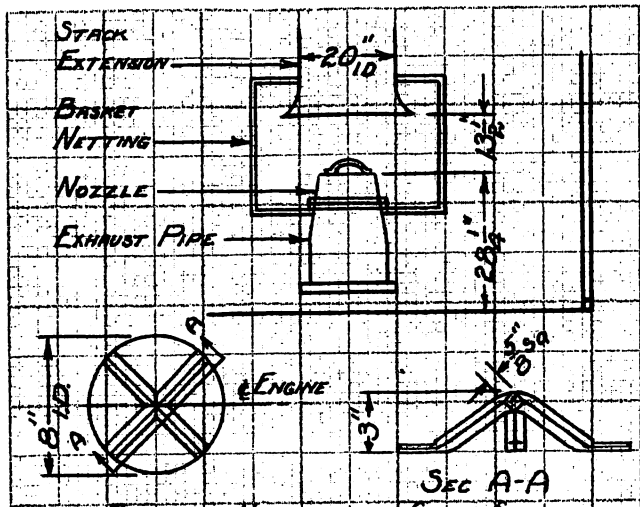

Detail of Nozzle and Cross Split

Smokebox Arrangement

For Sketch of Firepan Arrangement
See Fig. No. 4-101

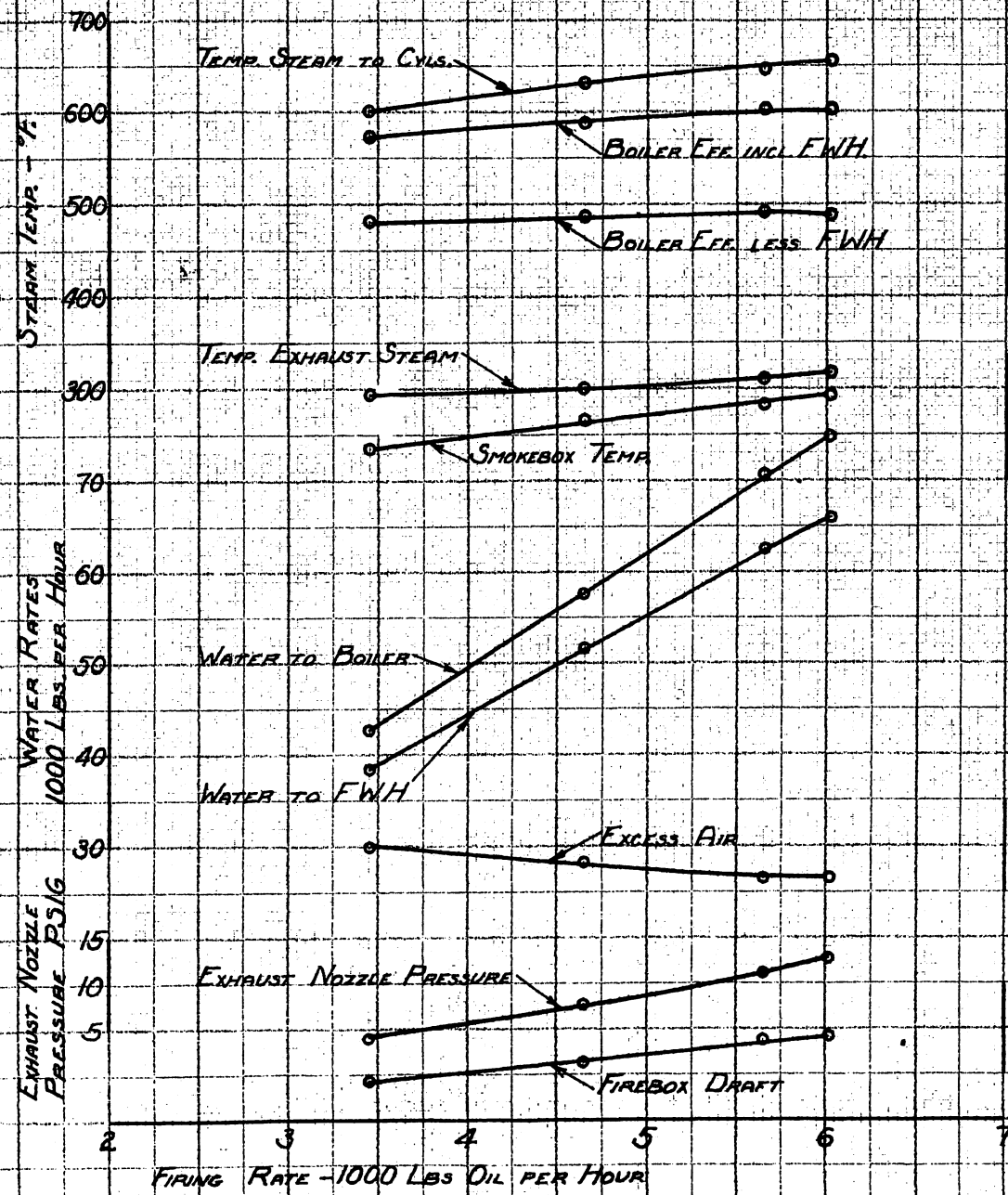

Series FDS 25-Q

Fig. 4-78

Standing Test Plant, Sacramento — Standing Test Engine 4401 — June 15, 1949

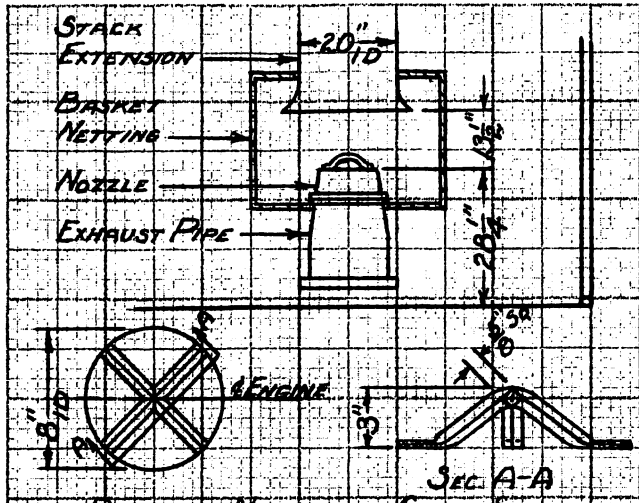

Detail of Nozzle and Cross Split

Smokebox Arrangement

For Sketch of Firepan Arrangement See Fig. No. 4-102

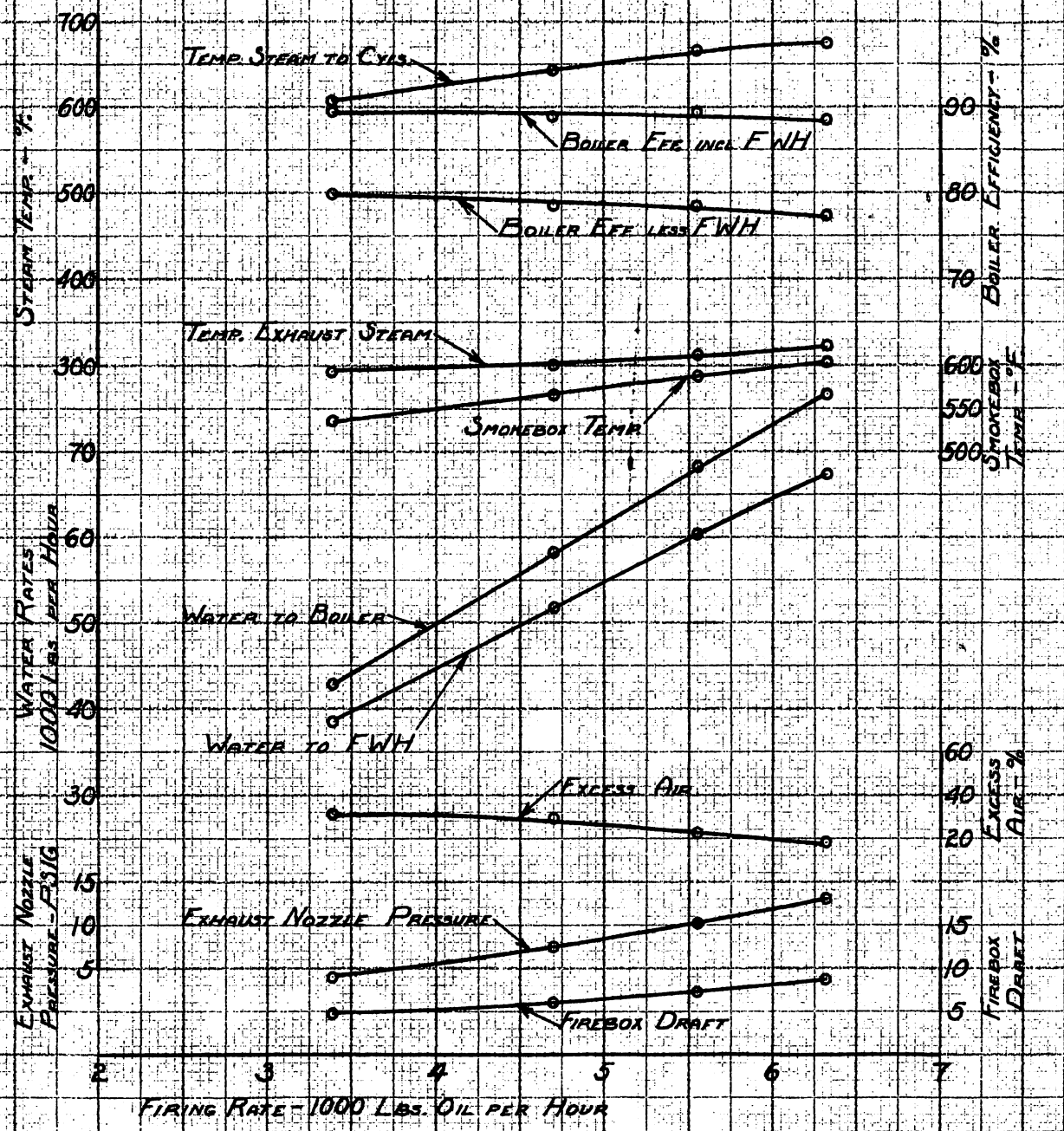

Fig. 4-79

Series FDS 26-Q

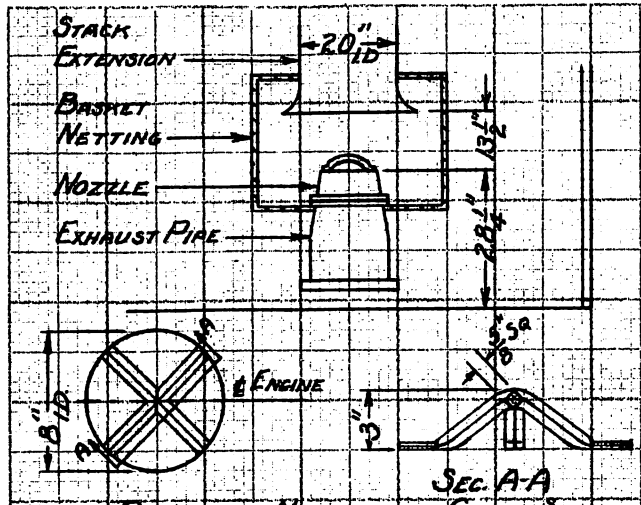

Detail of Nozzle and Cross Split

Smokebox Arrangement

For Sketch of Firepan Arrangement
See Fig. No. 4-103

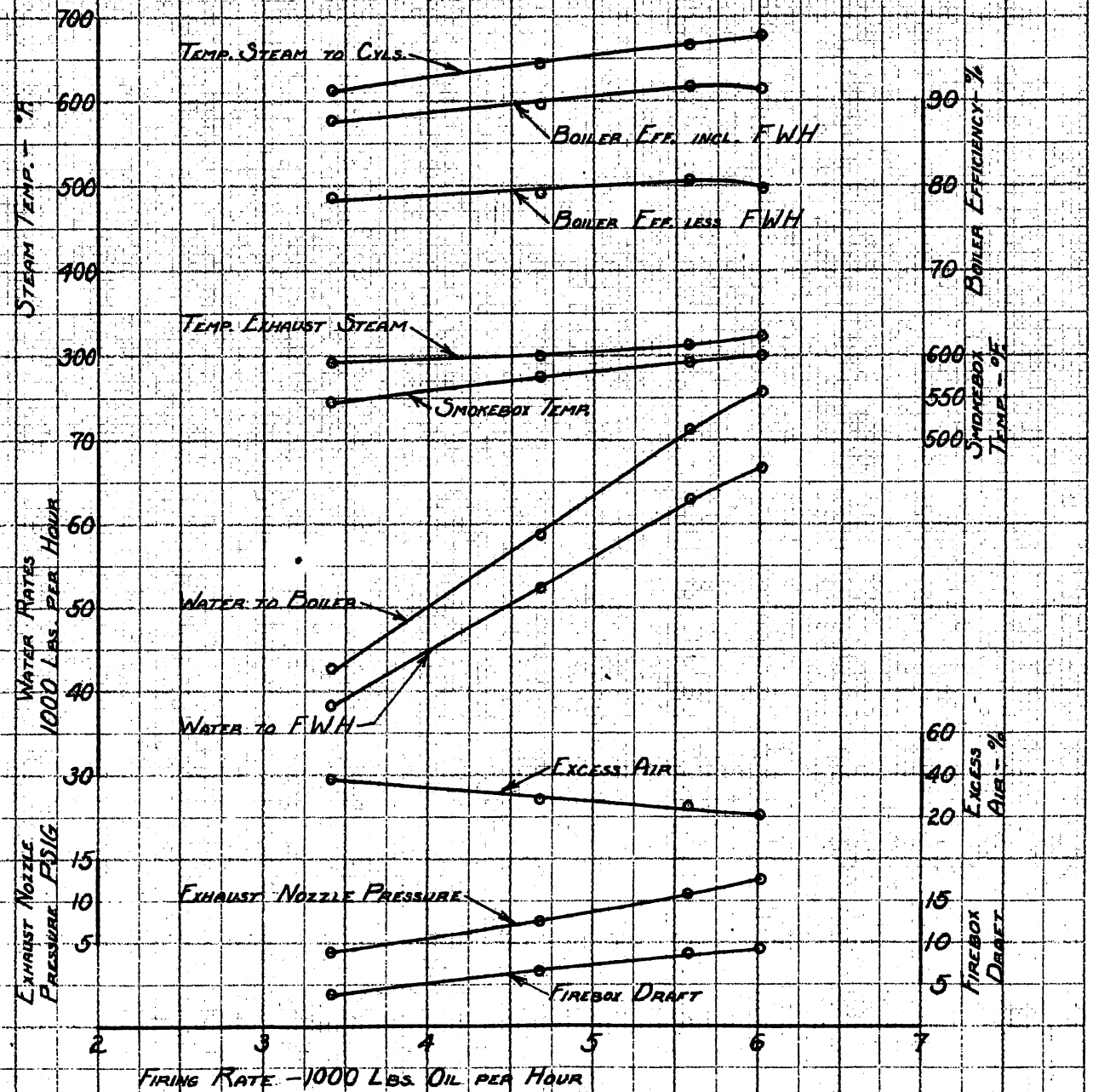

Fig. 4-80

Series FDS 27-Q

Standing Test Plant, Sacramento — Standing Test Engine 4401 — June 15, 1949

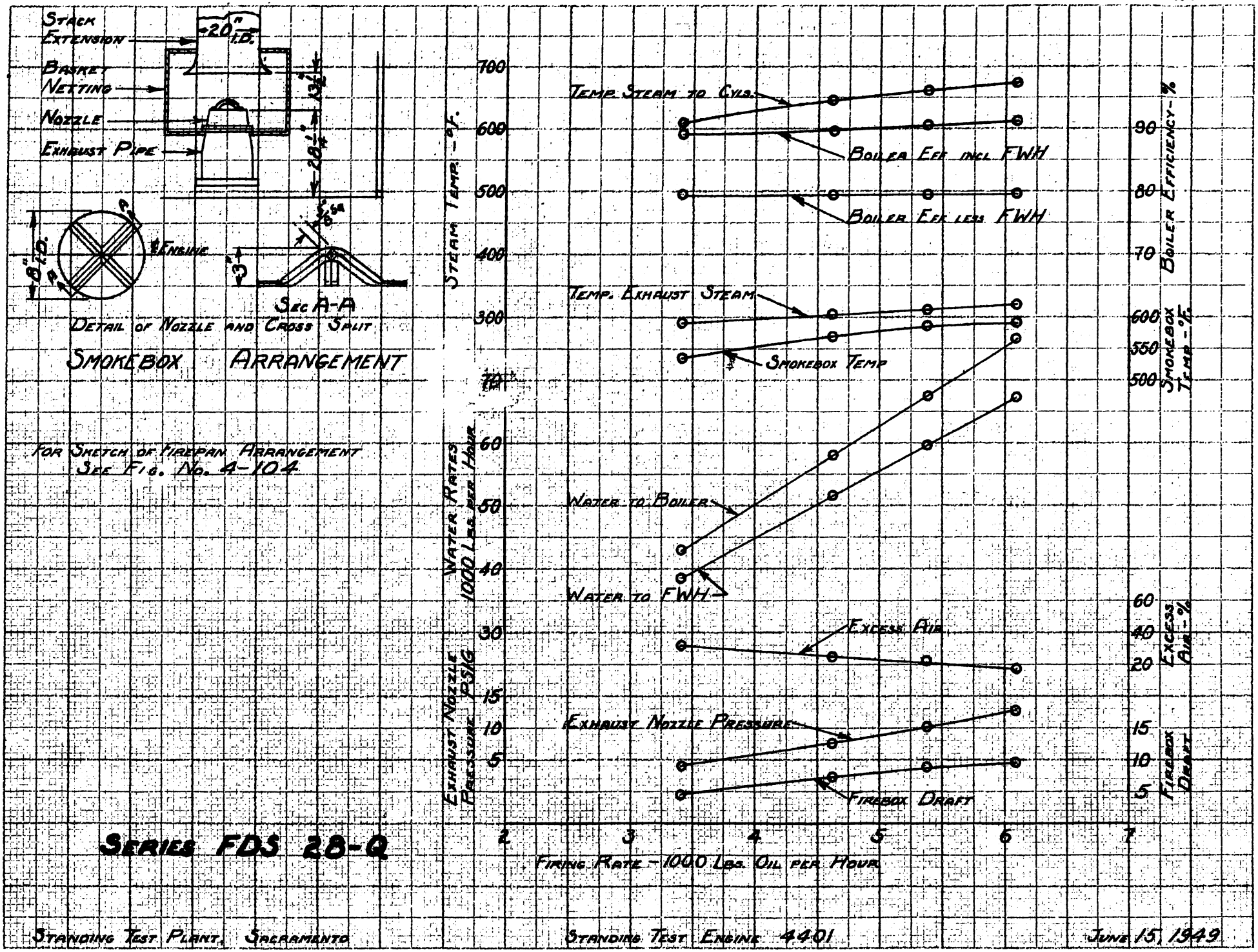
Stack Extension
20" I.D.
Basket Netting
Nozzle
Exhaust Pipe
28¼"
13¼"
8" I.D.
Engine
3"
Sec A-A
Detail of Nozzle and Cross Split
Smokebox Arrangement
For Sketch of Firepan Arrangement See Fig. No. 4-104
Series FDS 28-Q
Steam Temp. - °F.
700
600
500
400
300
Temp Steam to Cyls.
Boiler Eff incl FWH
Boiler Eff less FWH
Temp. Exhaust Steam
Smokebox Temp
Water Rates 1000 Lbs. per Hour
60
50
40
30
Water to Boiler
Water to FWH
Excess Air
Exhaust Nozzle Pressure PSIG
15
10
5
Exhaust Nozzle Pressure
Firebox Draft
Boiler Efficiency - %
90
80
70
Smokebox Temp - °F.
600
550
500
Excess Air - %
60
40
20
Firebox Draft
15
10
5
2
3
4
5
6
7
Firing Rate - 1000 Lbs. Oil per Hour

Fig. 4-81

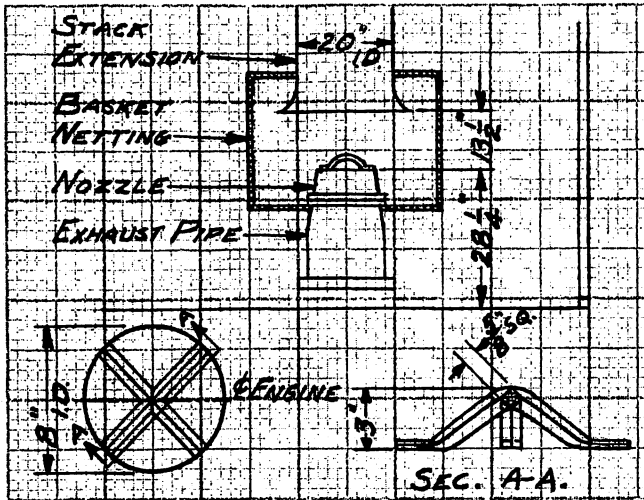

Detail of Nozzle and Cross Split Smokebox Arrangement

For Sketch of Firepan Arrangement See Fig. No. 4-105

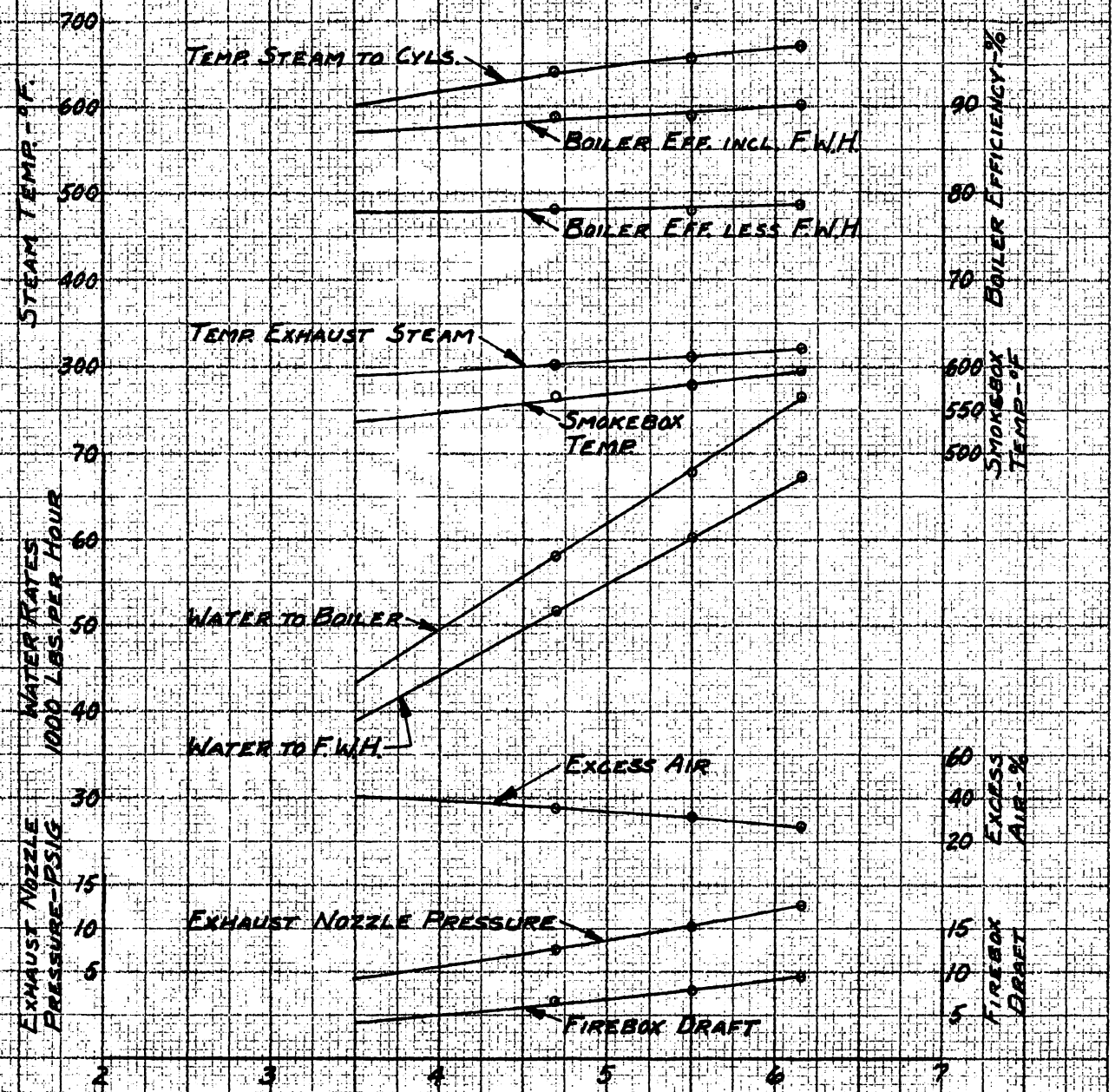

Series FDS 29-Q

Fig. 4-82

Standing Test Plant, Sacramento — Standing Test Engine 4401 — June 15, 1949

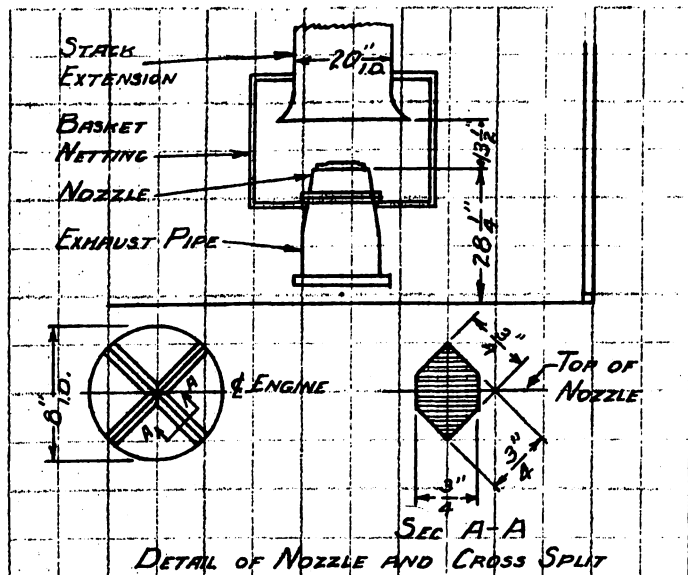

Detail of Nozzle and Cross Split

Smokebox Arrangement

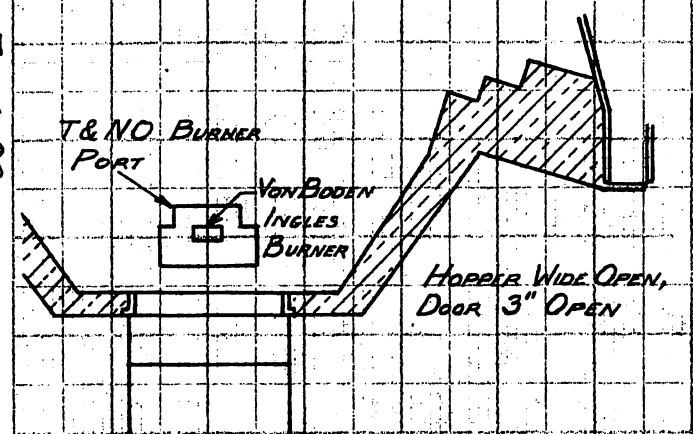

Section Through Bottom Hopper Looking Forward

Series FDT 1-B

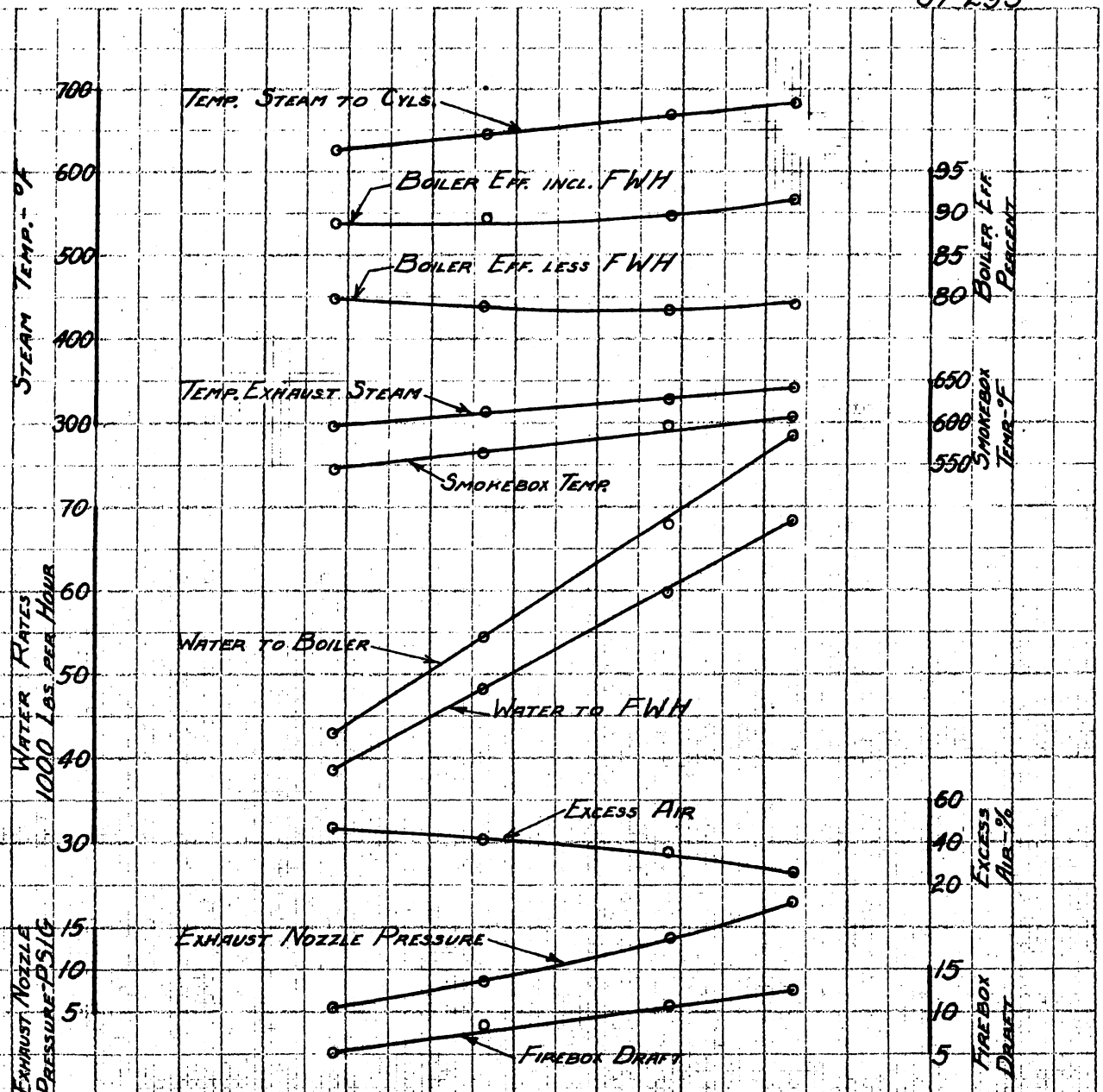

Fig. 4-83

Standing Test Plant, Sacramento

Standing Test Engine 4401

June 15, 1949

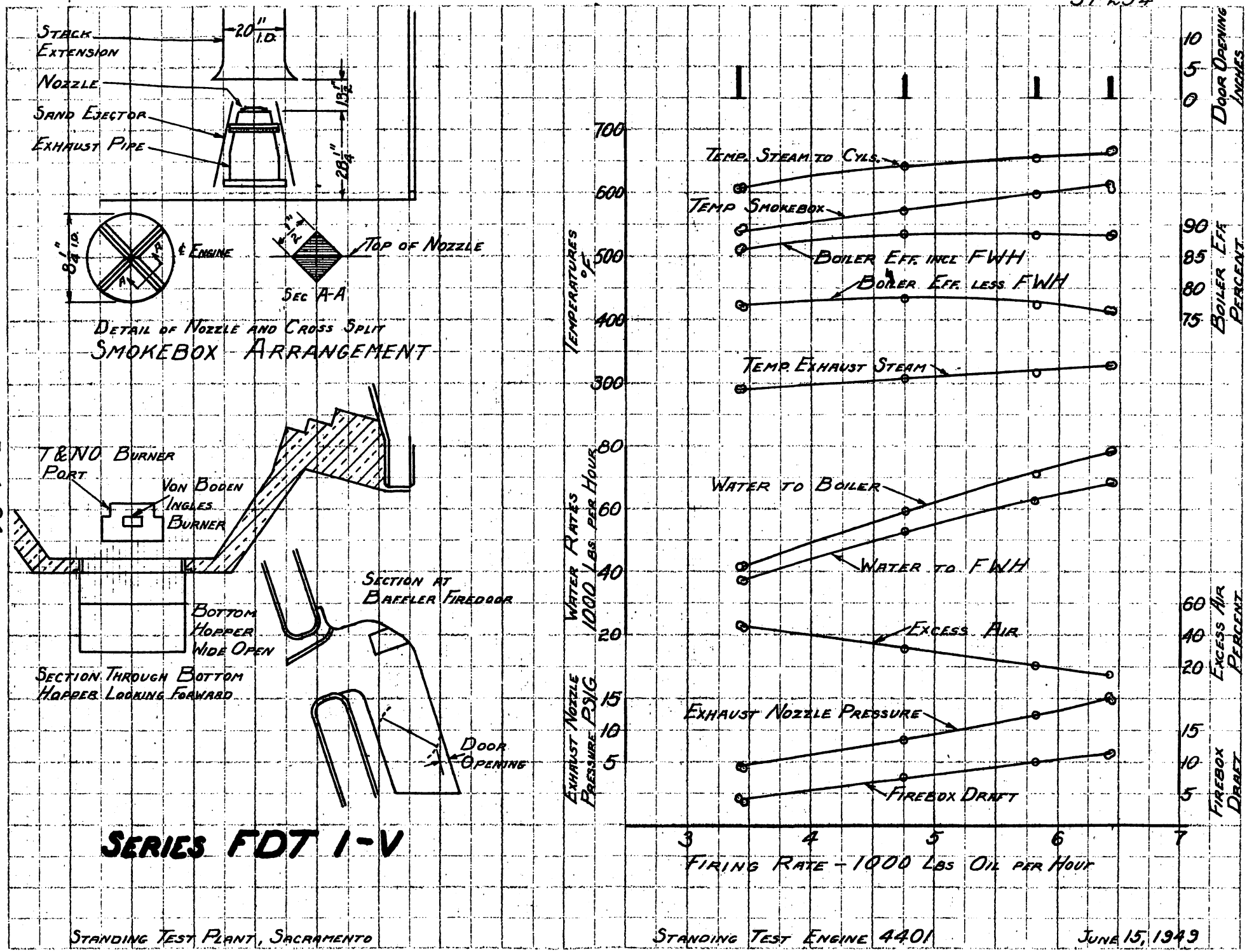

Fig. 4-84

Standing Test Plant, Sacramento

Standing Test Engine 4401

June 15, 1949

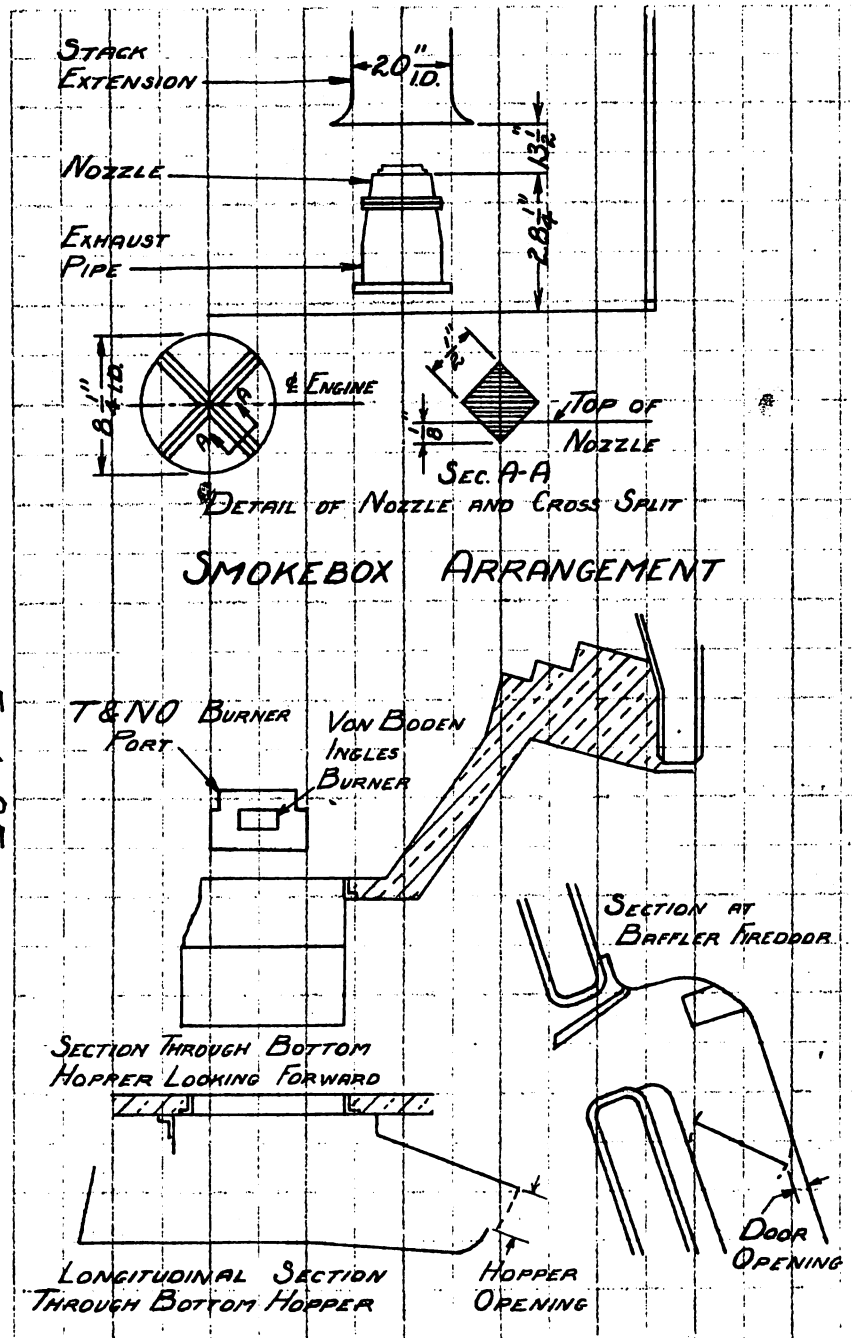

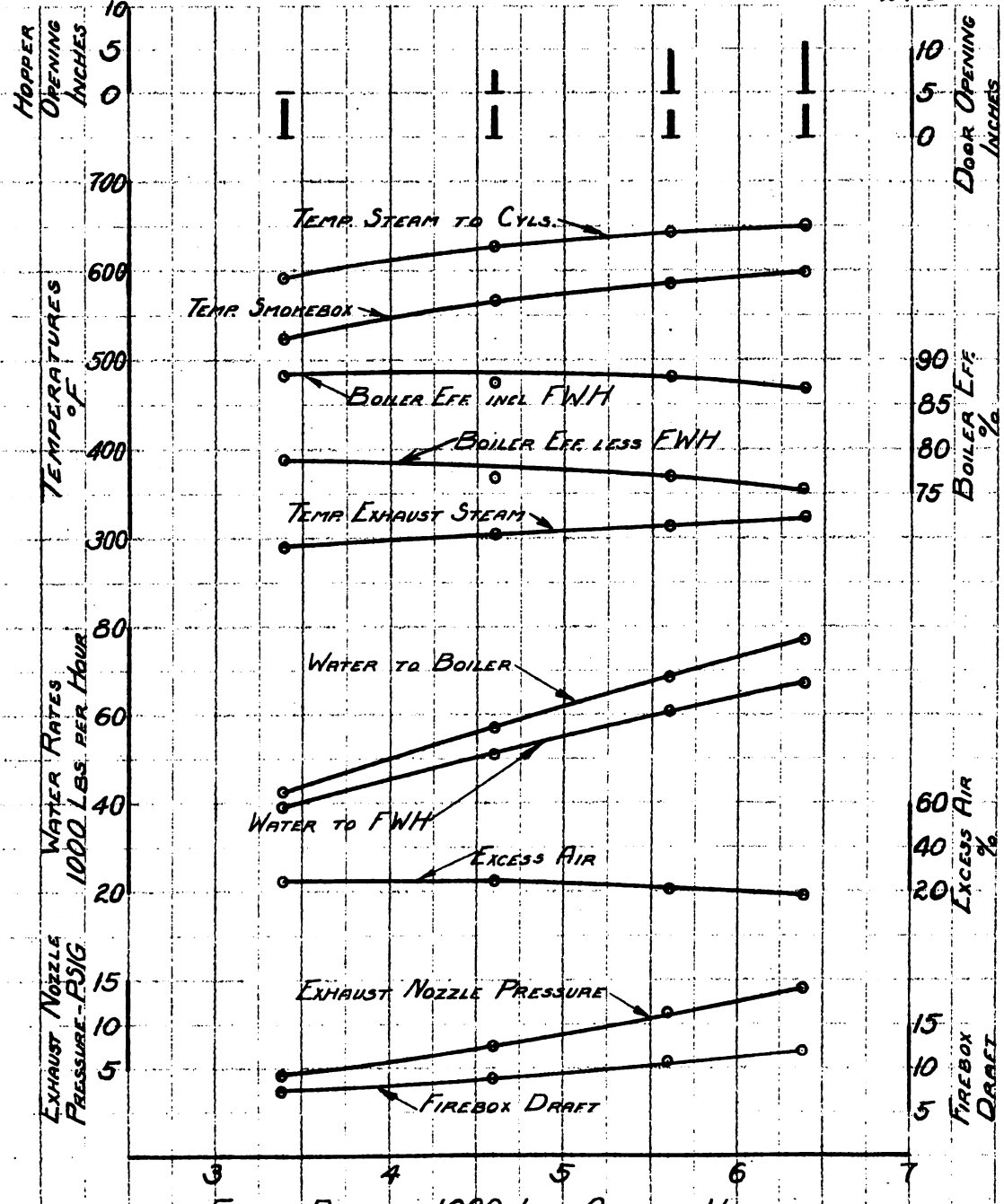

Fig. 4-85

SERIES FDT 1-X

Standing Test Plant, Sacramento

Standing Test Engine 4401

June 15, 1949

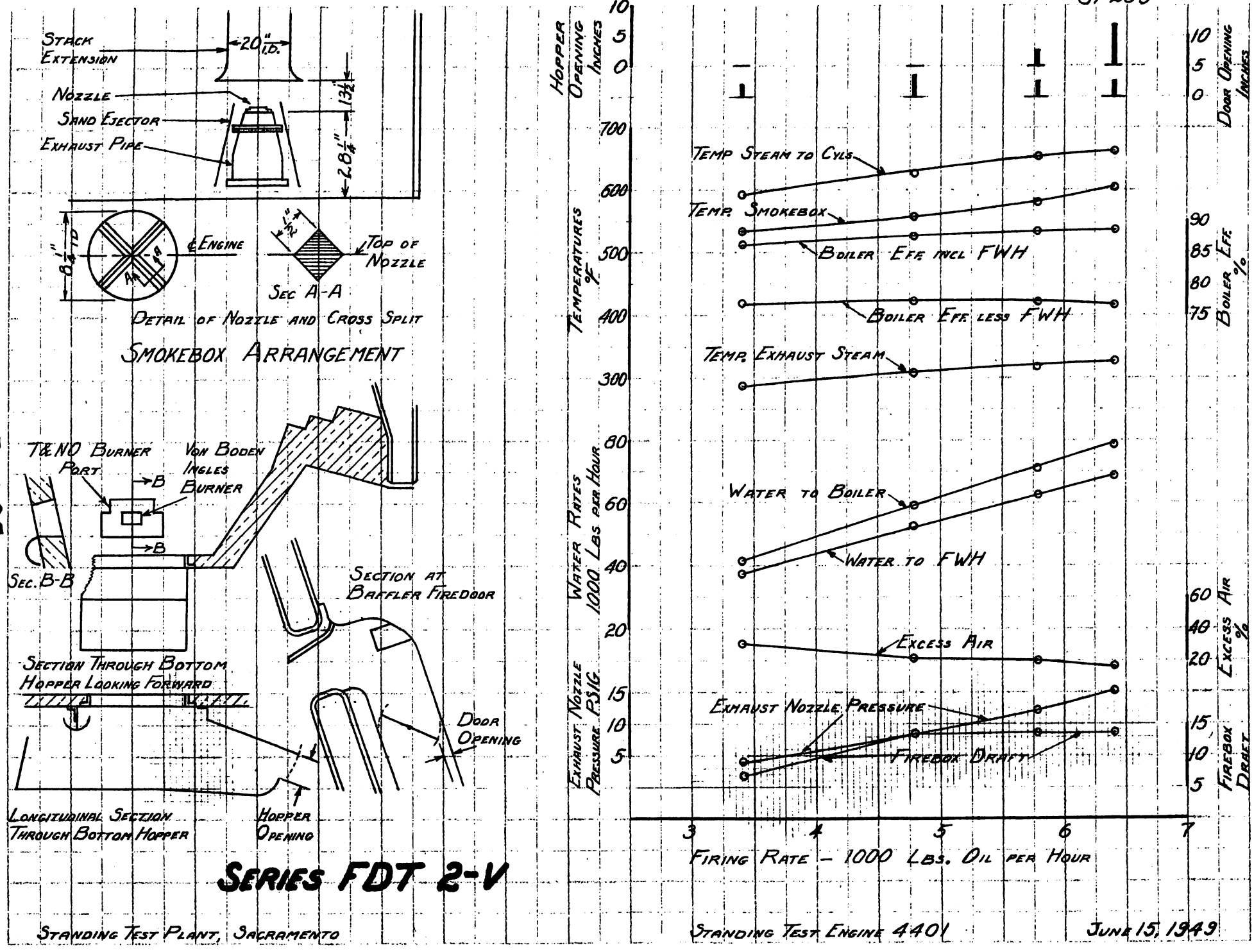
ST-255
Stack Extension
20" I.D.
Nozzle
Sand Ejector
Exhaust Pipe
13½"
28¼"
8¼" I.D.
℄ Engine
Top of Nozzle
Sec A-A
Detail of Nozzle and Cross Split
Smokebox Arrangement
T&NO Burner Port
Von Boden Ingles Burner
Sec. B-B
Section at Baffler Firedoor
Section Through Bottom Hopper Looking Forward
Door Opening
Longitudinal Section Through Bottom Hopper
Hopper Opening
Series FDT 2-V
Standing Test Plant, Sacramento
Hopper Opening Inches
Temperatures °F
Water Rates 1000 Lbs per Hour
Exhaust Nozzle Pressure P.S.I.G.
Door Opening Inches
Boiler Eff. %
Excess Air %
Firebox Draft
Temp Steam to Cyls
Temp. Smokebox
Boiler Eff. incl FWH
Boiler Eff. less FWH
Temp. Exhaust Steam
Water to Boiler
Water to FWH
Excess Air
Exhaust Nozzle Pressure
Firebox Draft
Firing Rate – 1000 Lbs. Oil per Hour
Standing Test Engine 4401
June 15, 1949

Fig. 4-86

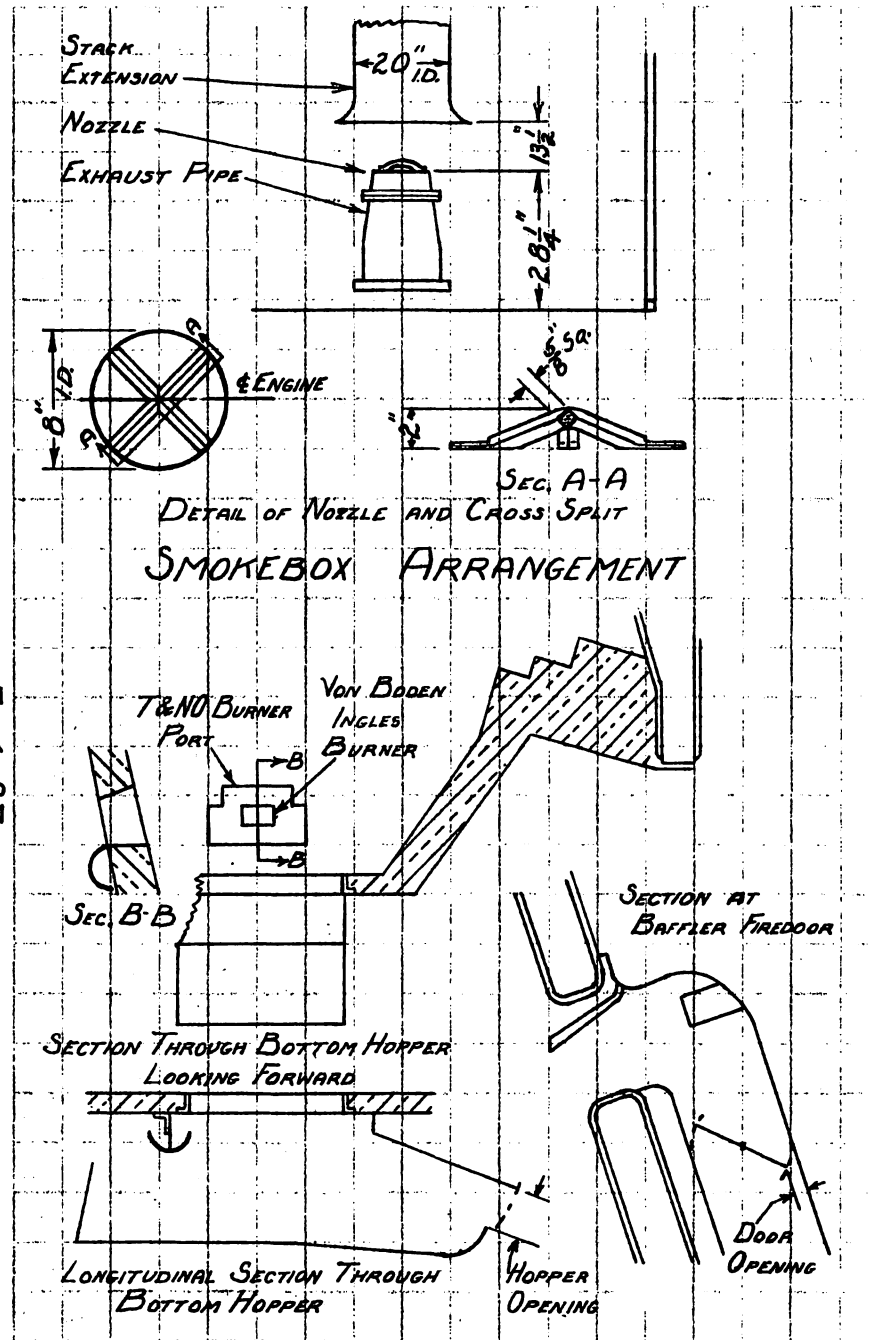

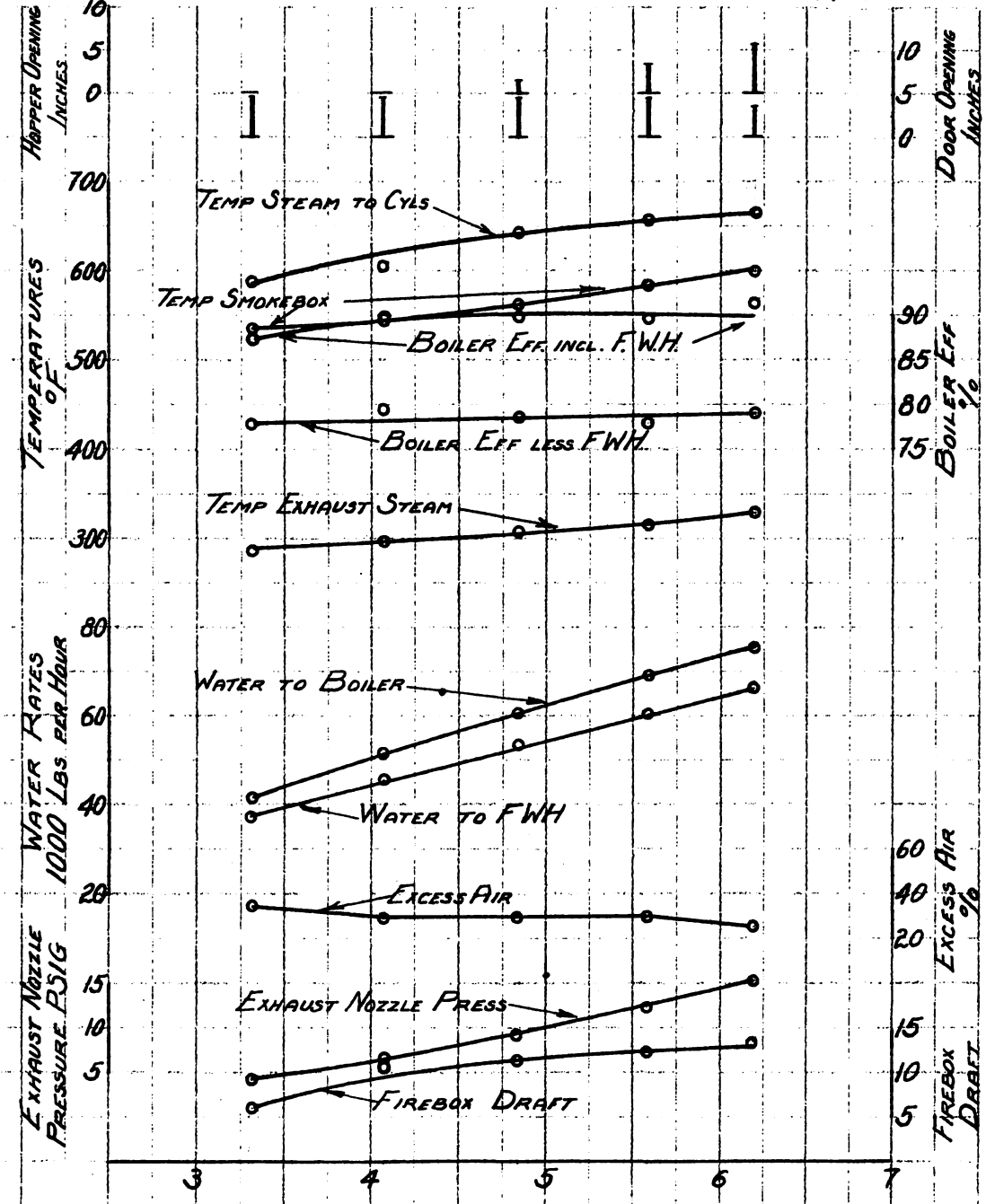

Fig. 4-87

SERIES FDT 2-W

Standing Test Plant, Sacramento

Standing Test Engine, 4401

June 15, 1949

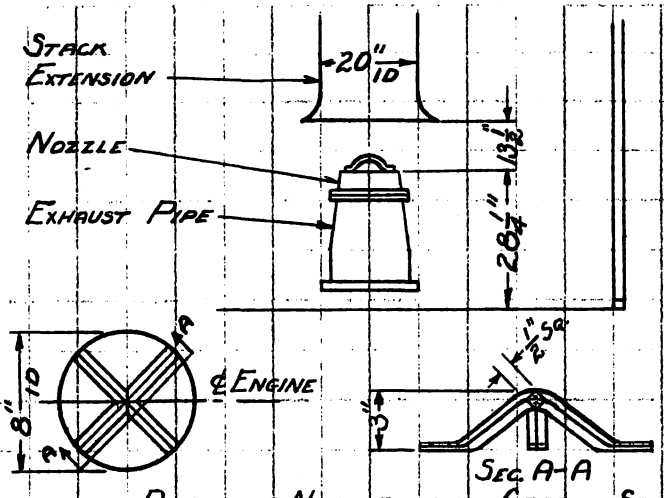

Detail of Nozzle and Cross Split

Smokebox Arrangement

For Sketch of Firepan Arrangement
See Fig. No. 4-106

* During this run, Fixed Front Opening of Bottom Hopper was closed.

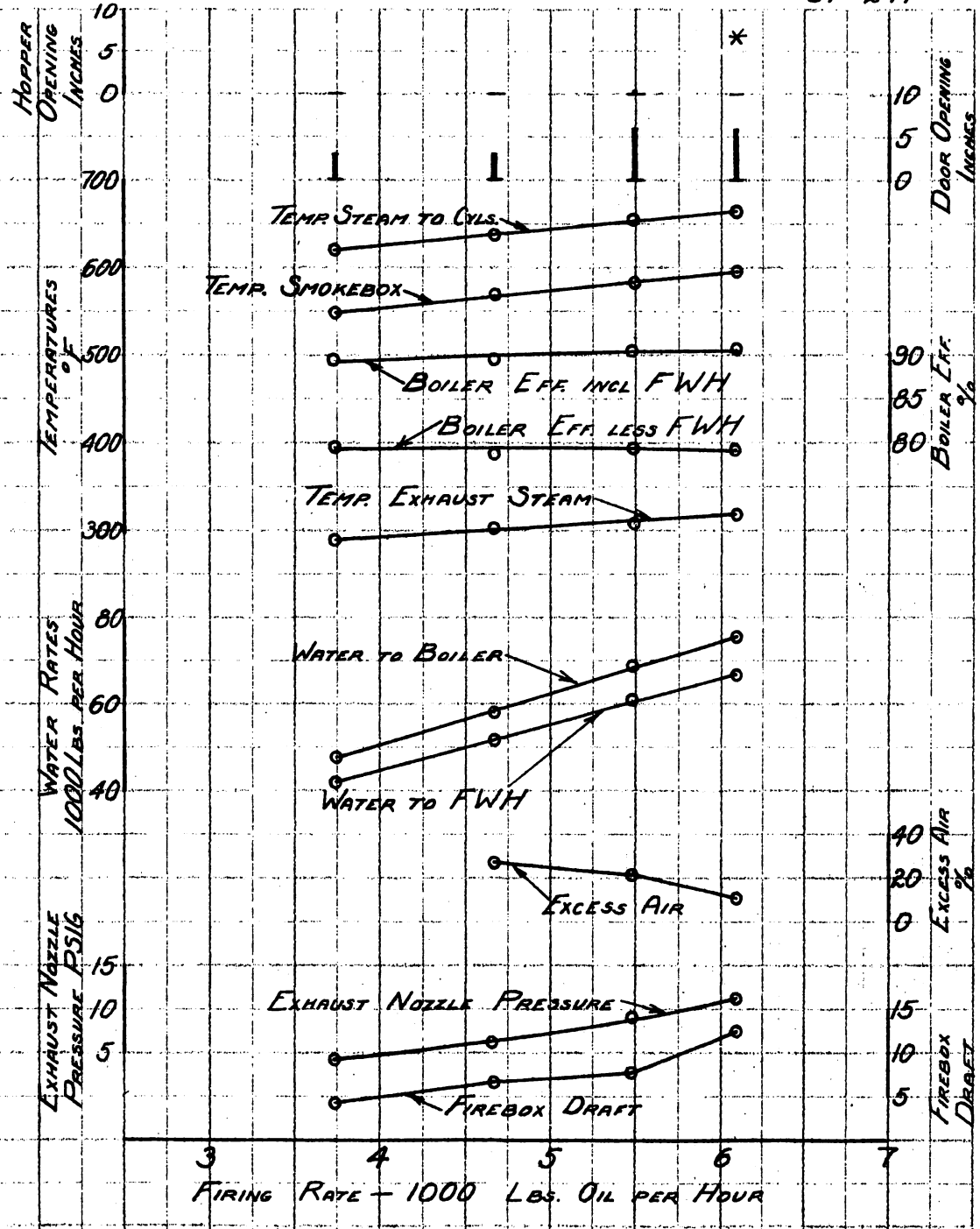

Fig. 4-88

SERIES FDT 3-Y

Standing Test Plant, Sacramento

Standing Test Engine 4401

June 15, 1949

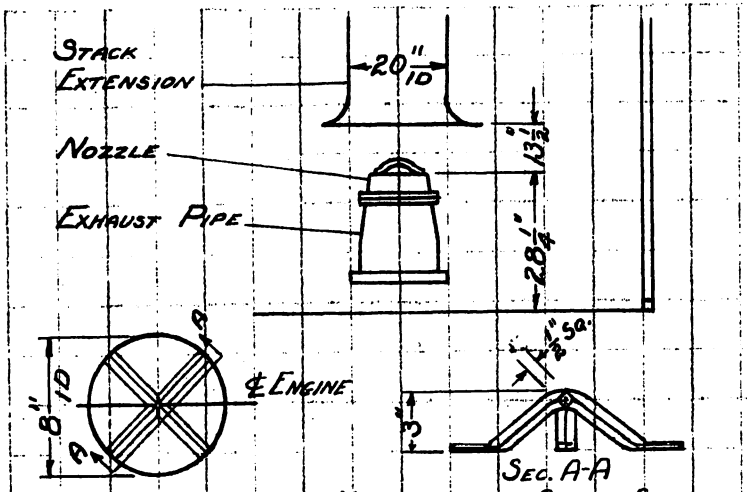

Detail of Nozzle and Cross Split

Smokebox Arrangement

For Sketch of Firepan Arrangement
See Fig. No. 4-107

Fig. 4-89

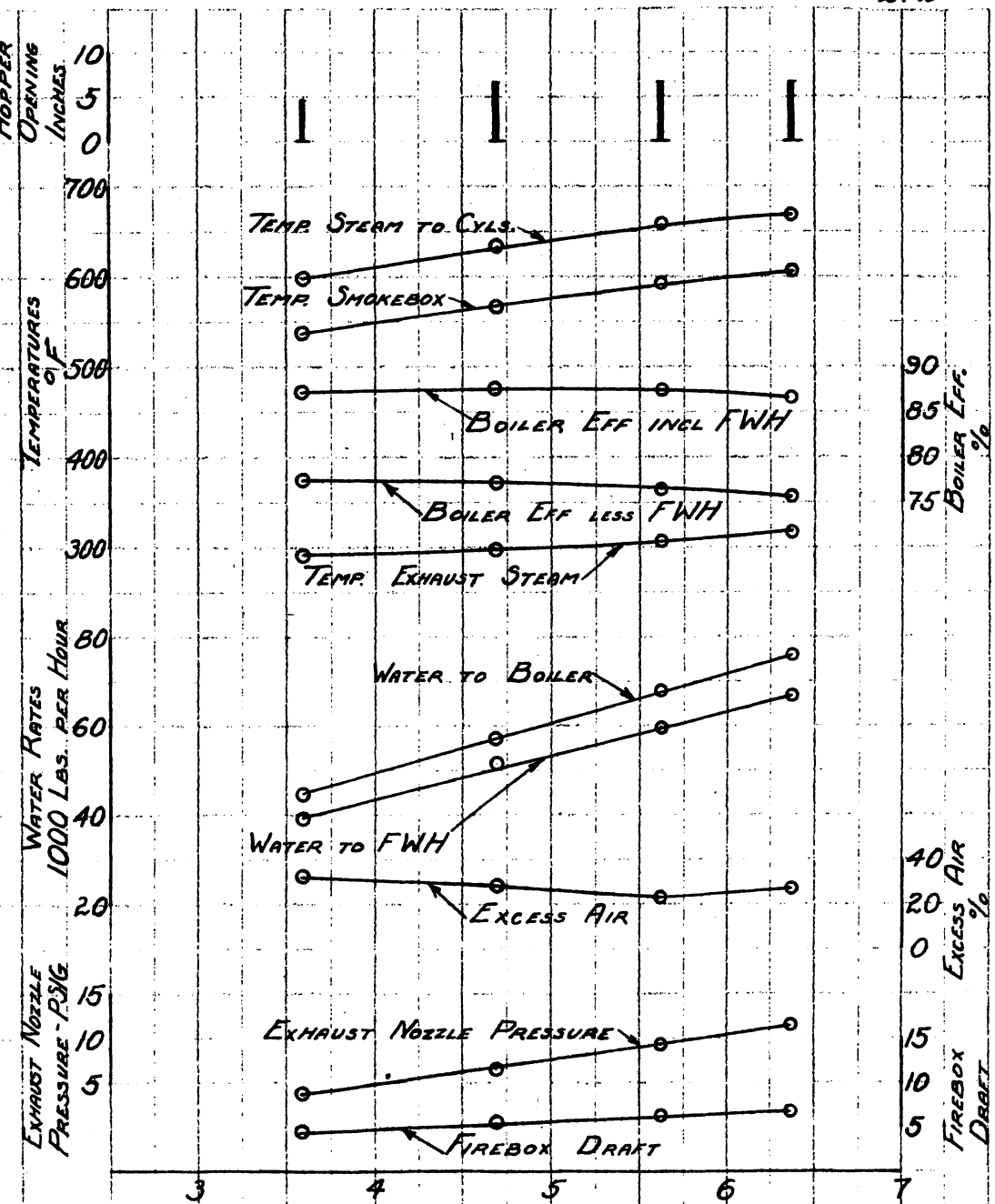

Series FDT 4-Y

Standing Test Plant, Sacramento

Standing Test Engine 4401

June 15, 1949

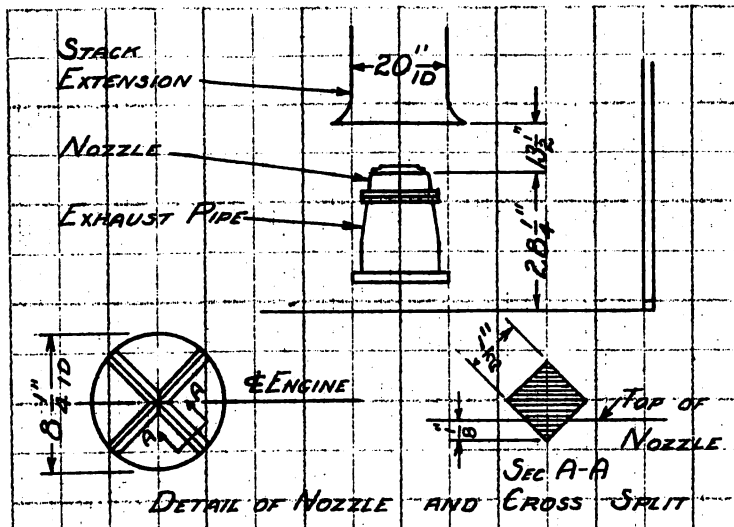

Smokebox Arrangement

For Sketch of Firepan Arrangement
See Fig. No. 4-108

Fig. 4-90

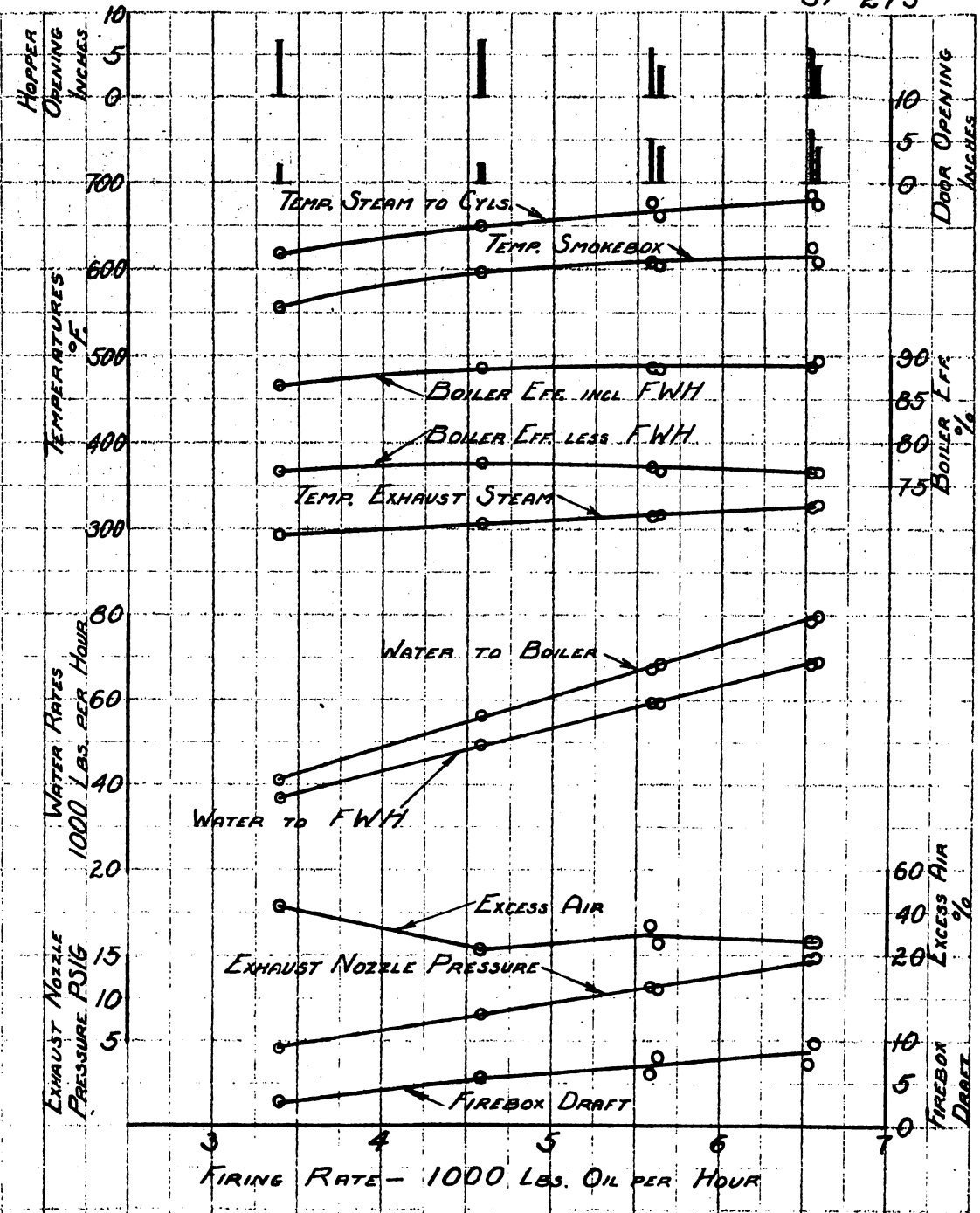

SERIES FDT5-X

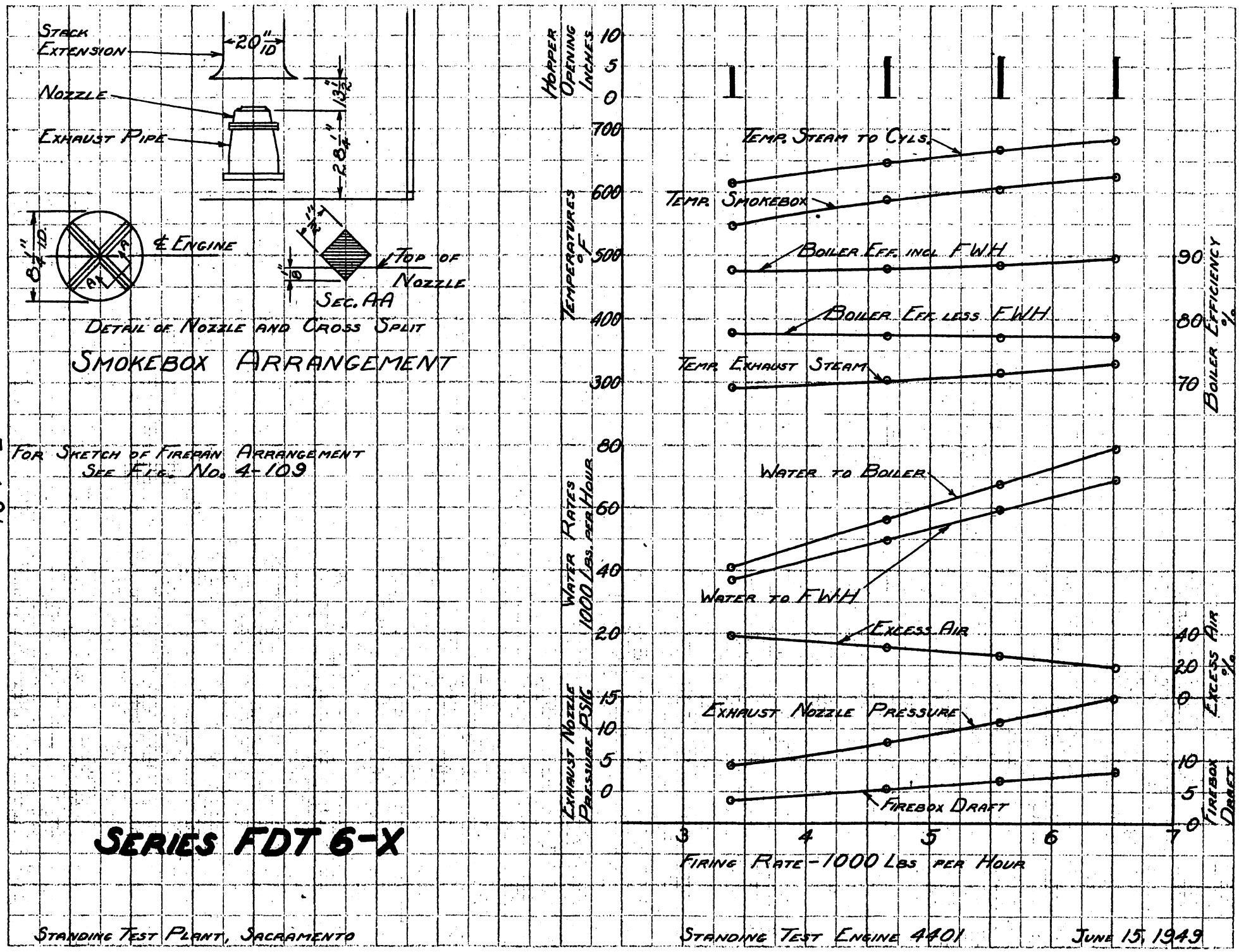
Stack Extension
20"/10"
Nozzle
Exhaust Pipe
13 1/2"
28 1/4"
8 1/4" I.D.
℄ Engine
A
A
Top of Nozzle
Sec. AA
Detail of Nozzle and Cross Split
Smokebox Arrangement
For Sketch of Firepan Arrangement See Fig. No. 4-109
Series FDT 6-X
Standing Test Plant, Sacramento
Hopper Opening Inches
10
5
0
Temperatures °F
700
600
500
400
300
Temp. Steam to Cyls.
Temp. Smokebox
Boiler Eff. incl. FWH
Boiler Eff. less FWH
Temp. Exhaust Steam
Boiler Efficiency %
90
80
70
Water Rates 1000 Lbs. per Hour
80
60
40
20
Water to Boiler
Water to FWH
Excess Air
Excess Air %
40
20
0
Exhaust Nozzle Pressure PSIG
15
10
5
0
Exhaust Nozzle Pressure
Firebox Draft
Firebox Draft
10
5
0
3
4
5
6
7
Firing Rate - 1000 Lbs per Hour
Standing Test Engine 4401
June 15, 1949

Fig. 4-91

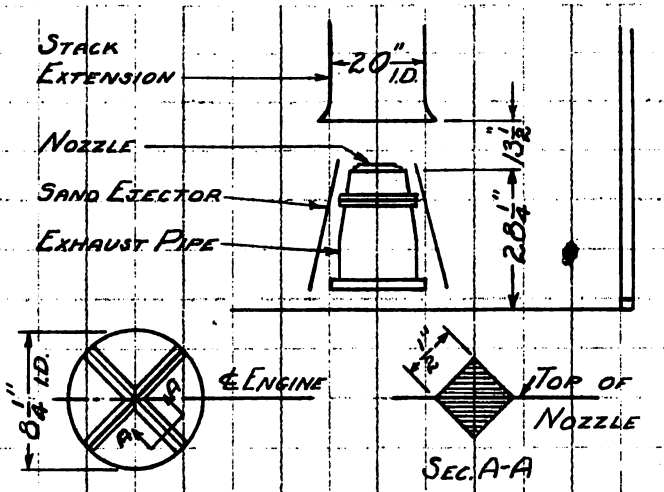

Detail of Nozzle and Cross Split

Smokebox Arrangement

For Sketch of Firepan Arrangement See Fig. No. 4-110

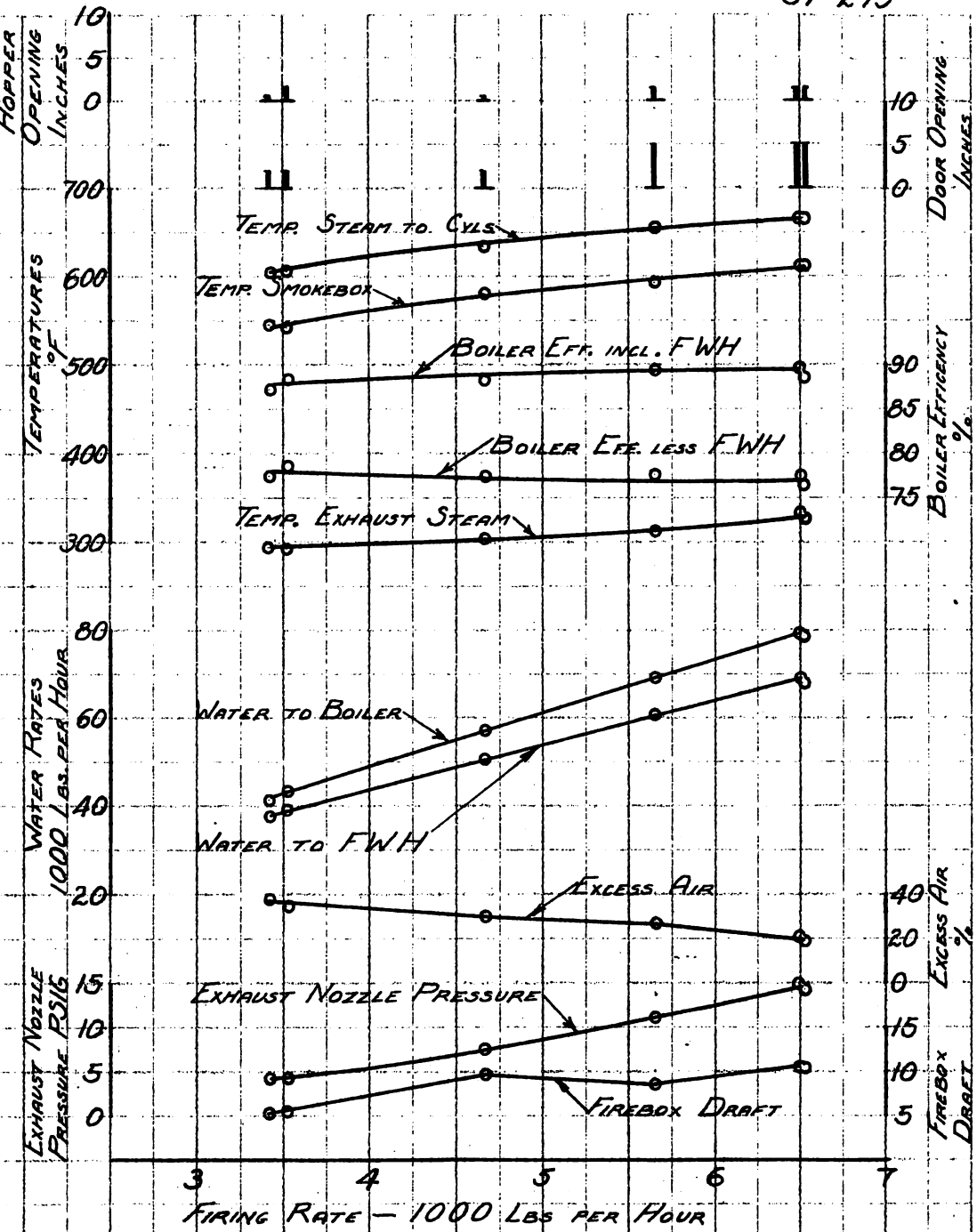

Series FDT 7-V

Standing Test Plant, Sacramento

Standing Test Engine 4401

June 15, 1949

Fig. 4-92

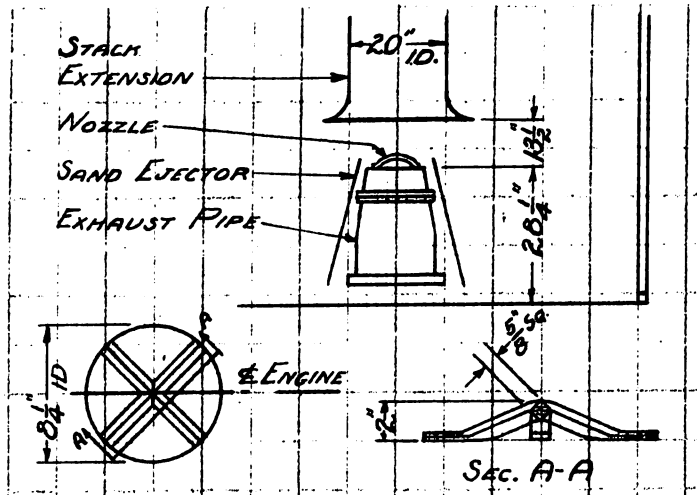

Detail of Nozzle and Cross Split

Smokebox Arrangement

For Sketch of Firepan Arrangement See Fig. No. 4-111

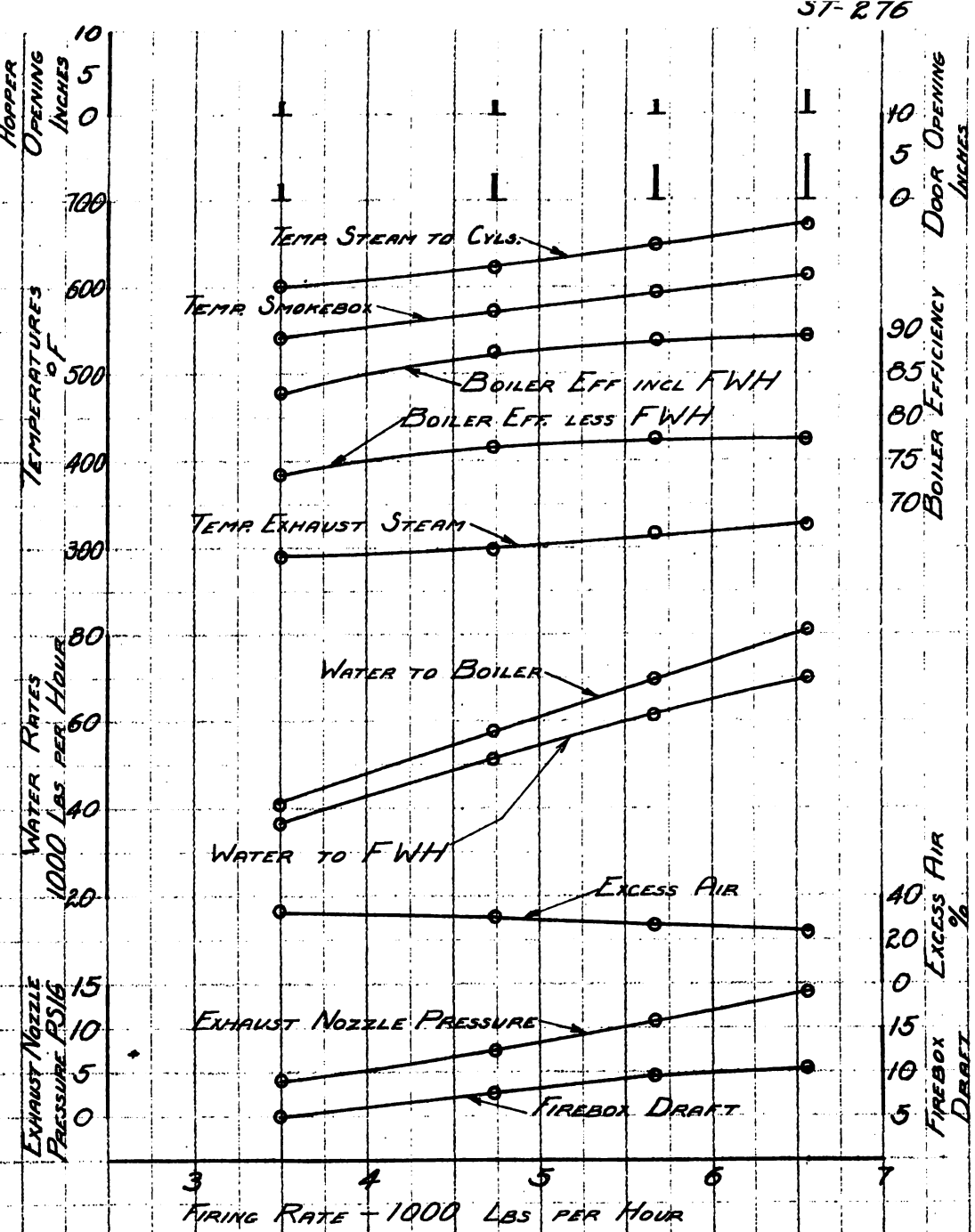

Series FDT 8-Z

Standing Test Plant, Sacramento

Standing Test Engine 4401

June 15, 1949

Fig. 4-93

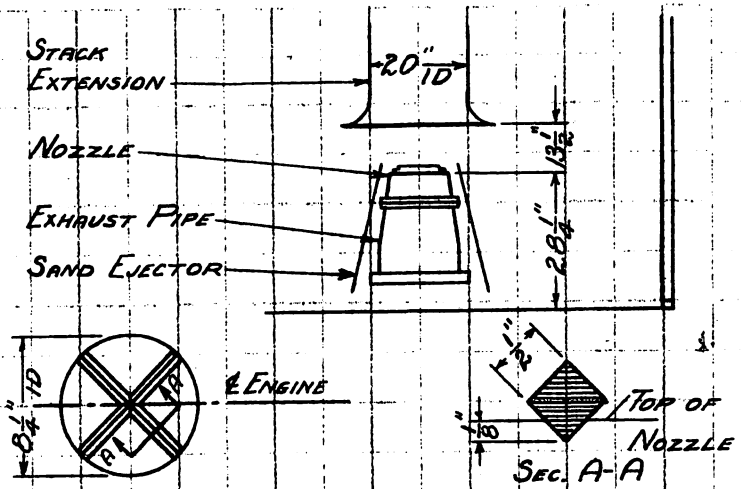

Detail of Nozzle and Cross Split

Smokebox Arrangement

For Sketch of Firepan Arrangement
See Fig. No. 4-112

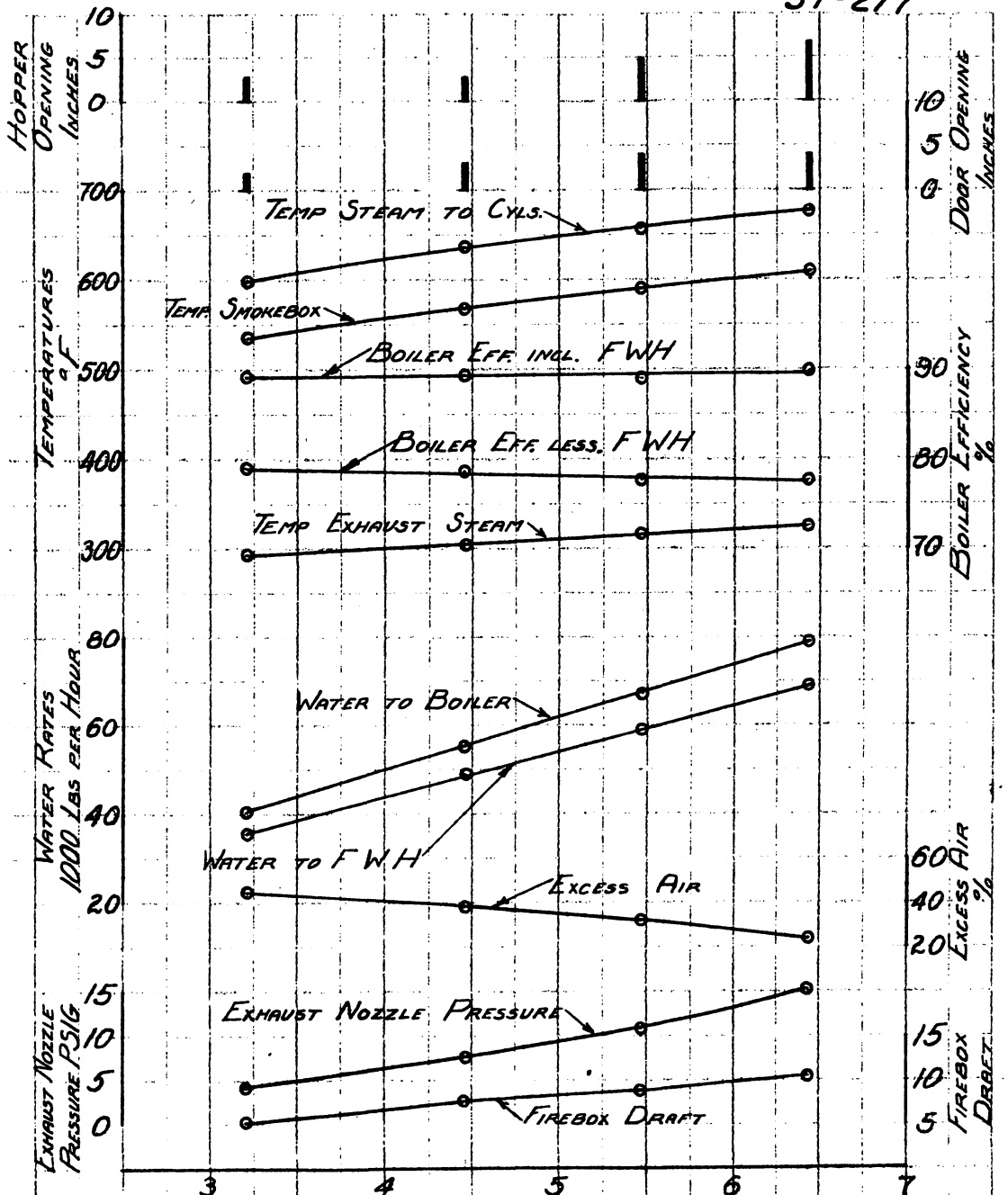

Series FDT 9-AA

Standing Test Plant, Sacramento

Standing Test Engine 4401

June 15, 1949

Fig. 4-94

ST-216

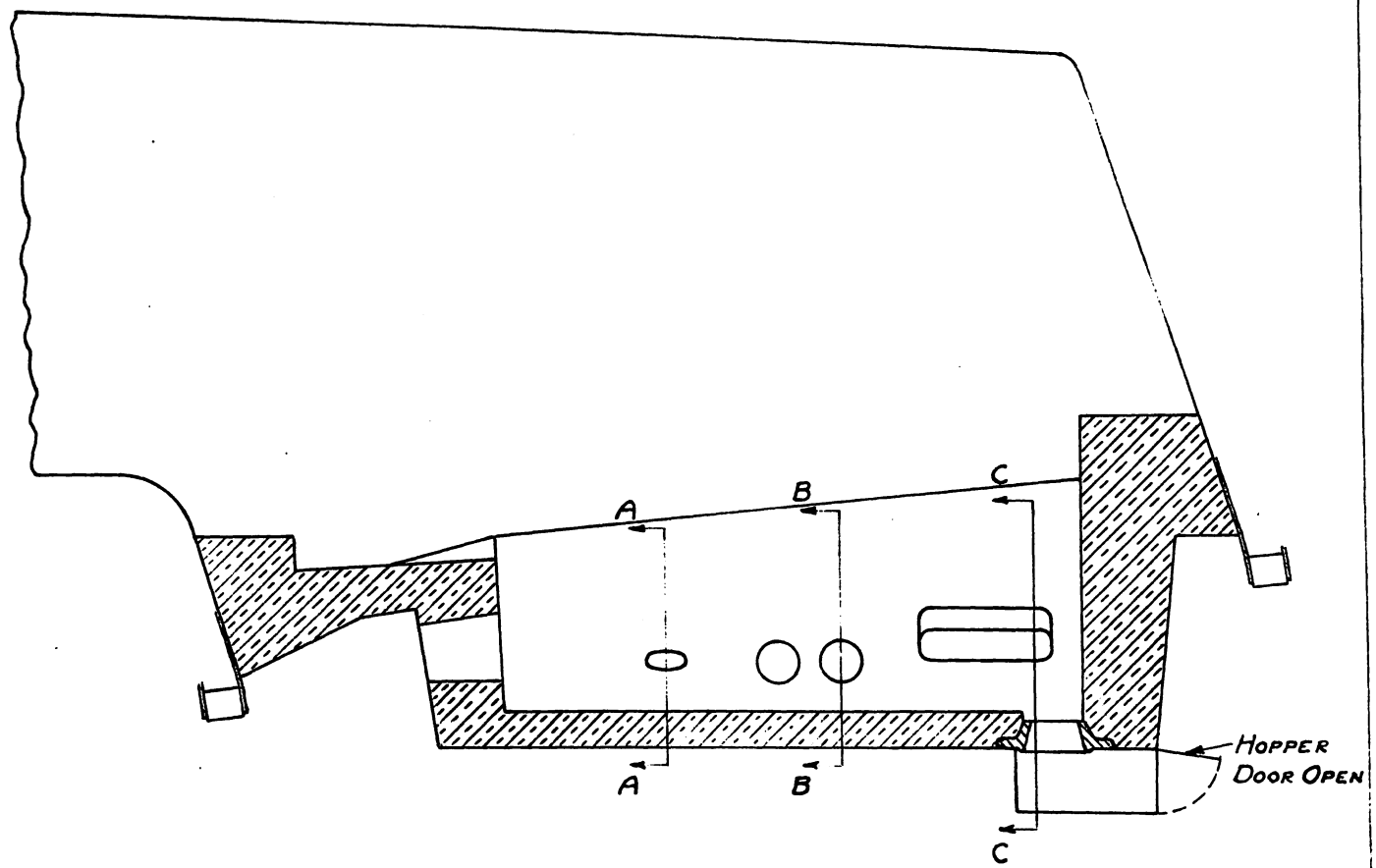

SECTION THROUGH VERTICAL ℄

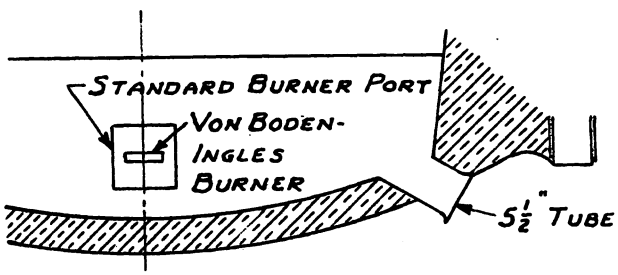

SECTION A-A

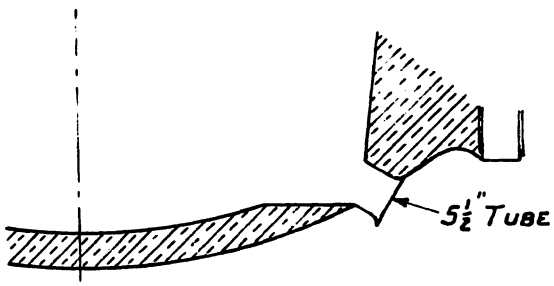

SECTION B-B

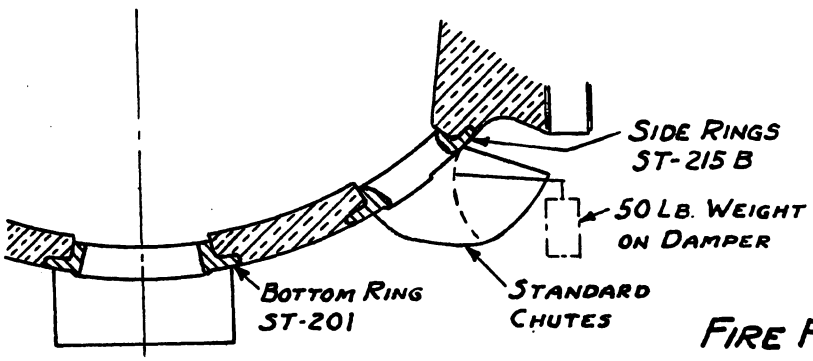

SECTION C-C

FIRE PAN ARRANGEMENT FDS-19

STANDING TEST ENGINE 4401

STANDING TEST PLANT, SACRAMENTO

JUNE 15, 1949

FIG. 4-95

ST-217

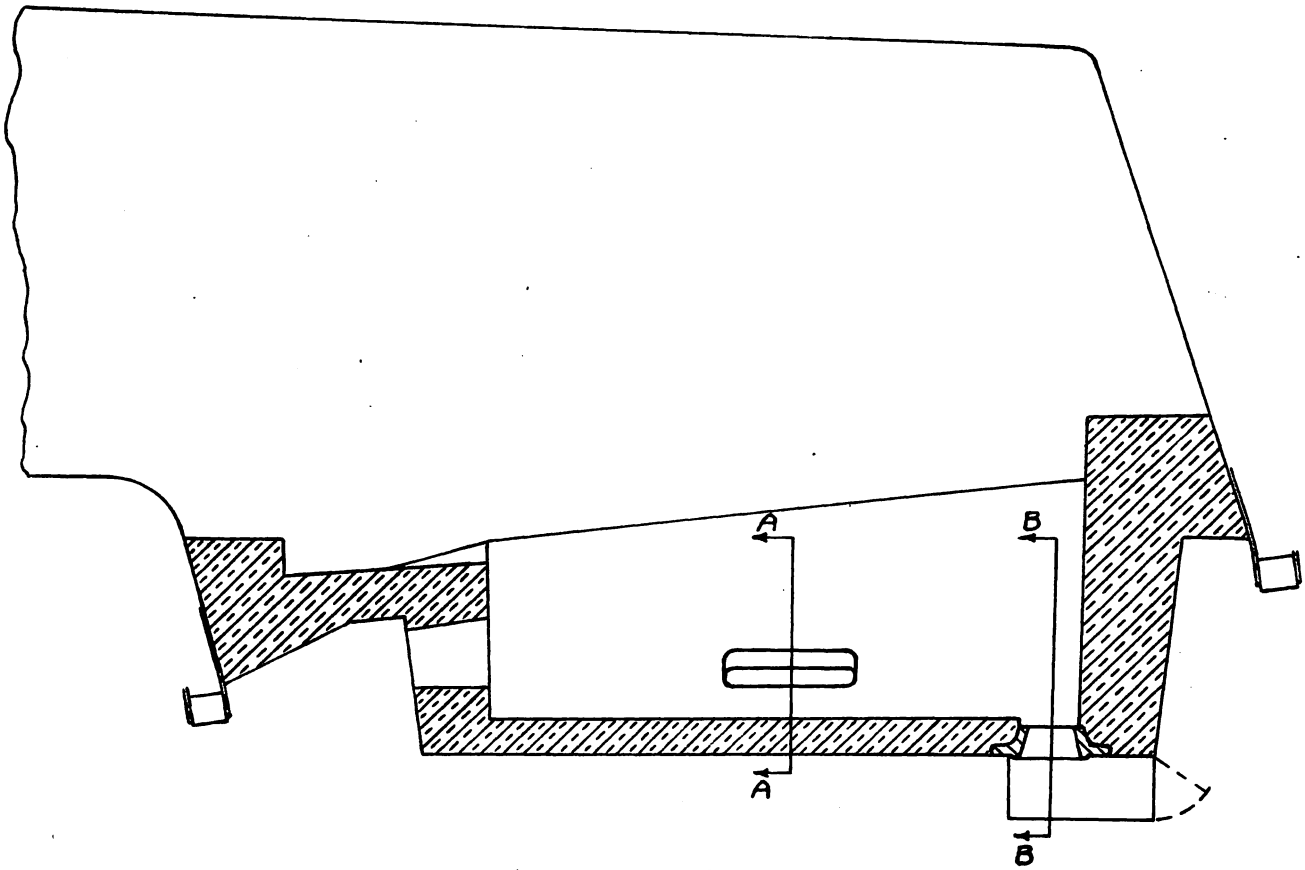

SECTION THROUGH VERTICAL ℄

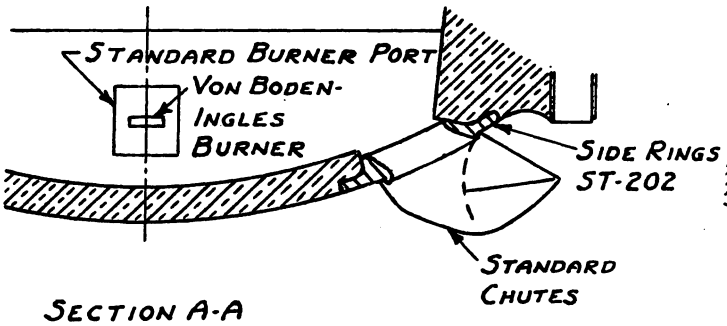

SECTION A-A

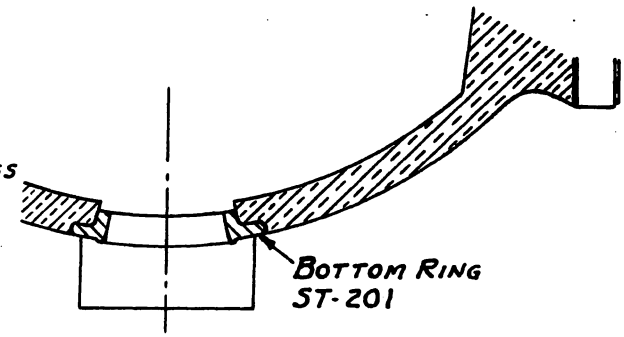

SECTION B-B

FIRE PAN ARRANGEMENT FDS-20
STANDING TEST ENGINE 4401

STANDING TEST PLANT, SACRAMENTO

JUNE 15, 1949

FIG. 4-96

ST-218

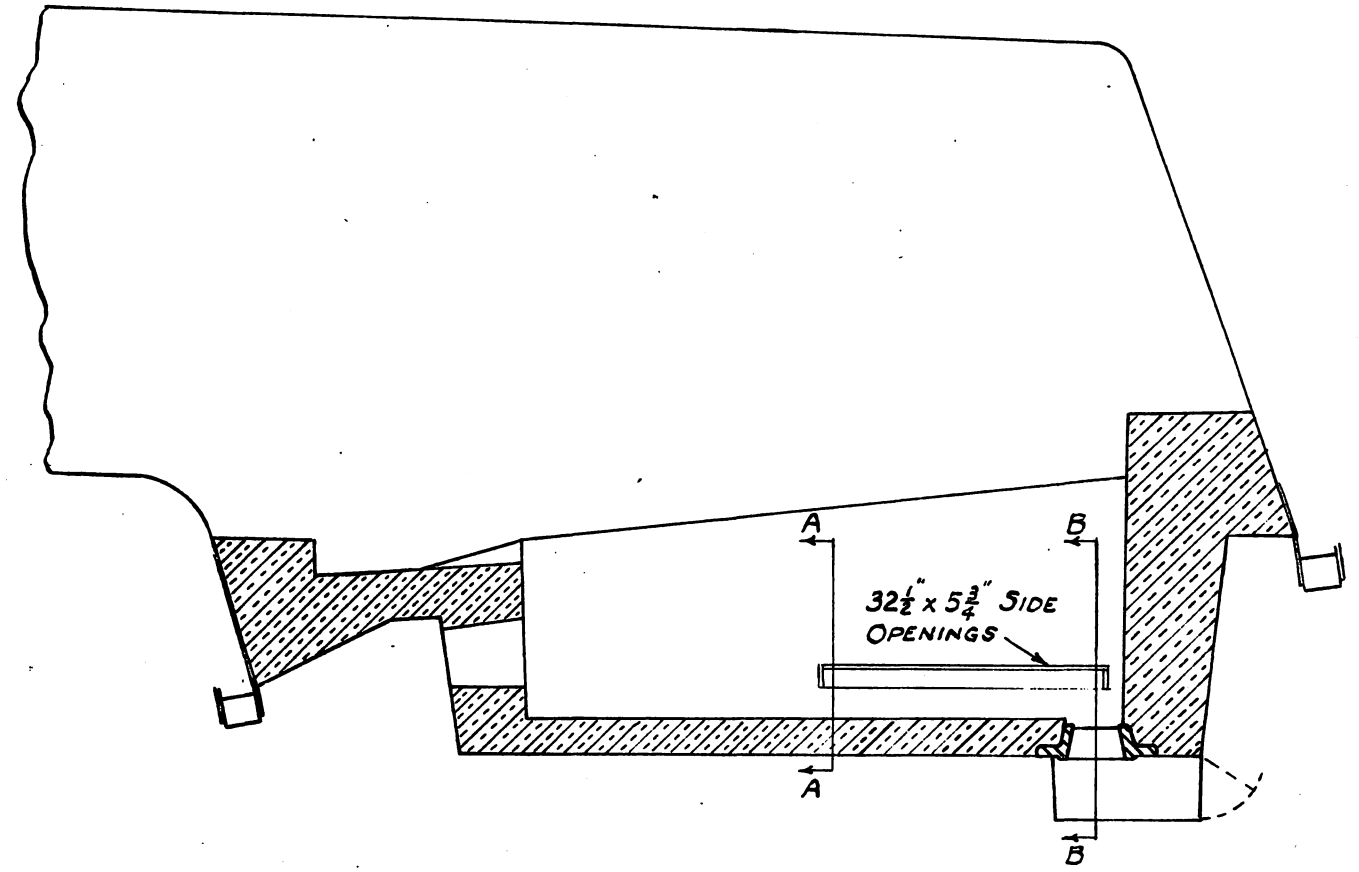

SECTION THROUGH VERTICAL ℄

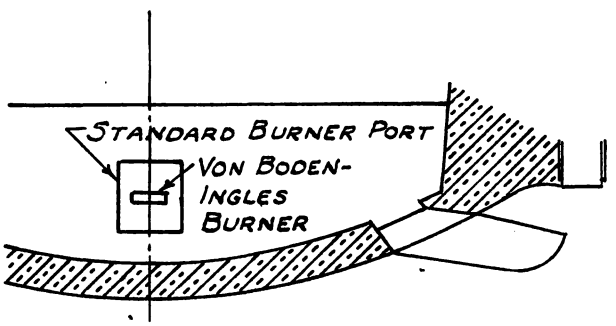

SECTION A-A

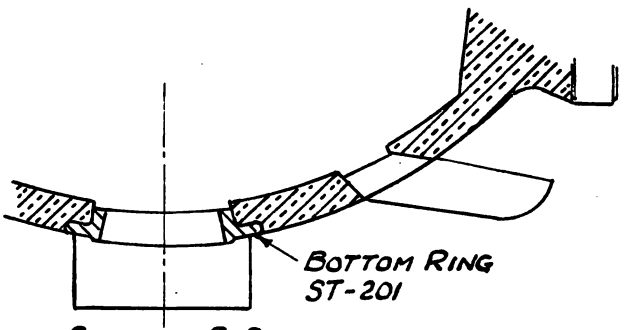

SECTION B-B

FIRE PAN ARRANGEMENT FDS-21

STANDING TEST ENGINE 4401

STANDING TEST PLANT, SACRAMENTO

JUNE 15, 1949

FIG. 4-97

ST-281

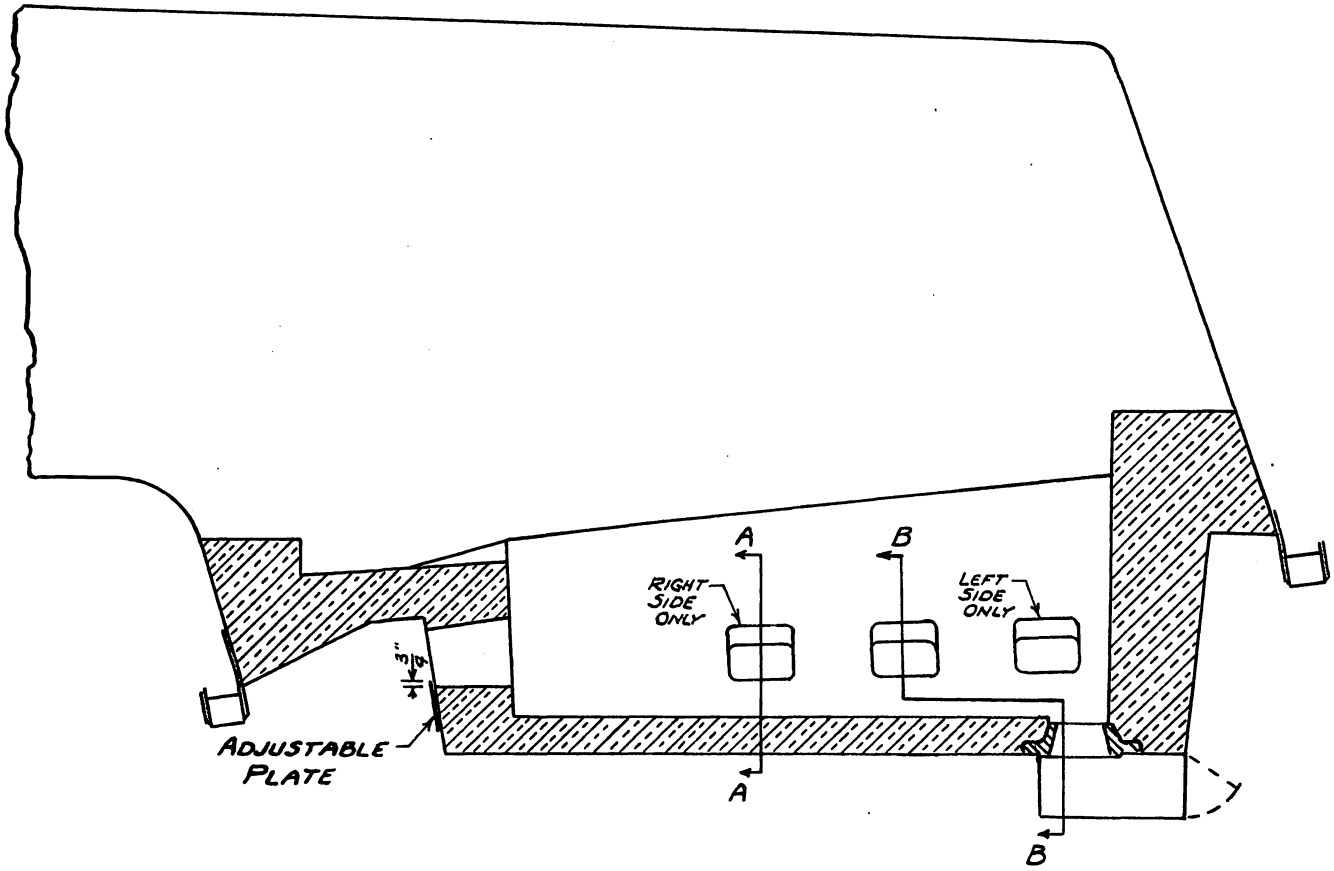

SECTION THROUGH VERTICAL ℄

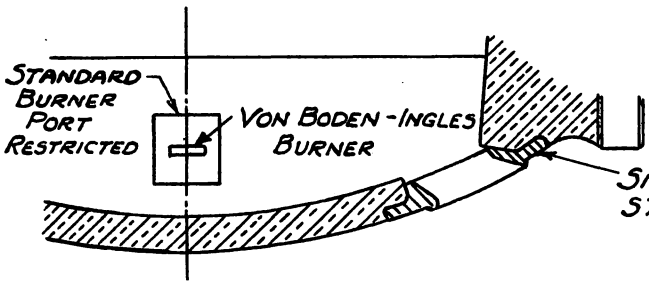

SECTION A-A

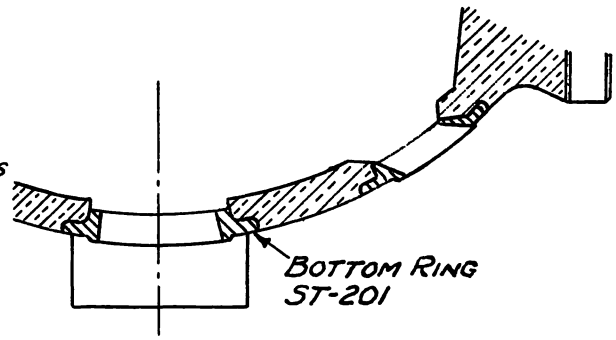

SECTION B-B

FIRE PAN ARRANGEMENT FDS-22

STANDING TEST ENGINE 4401

STANDING TEST PLANT, SACRAMENTO — JUNE 15, 1949

FIG. 4-98

ST-282

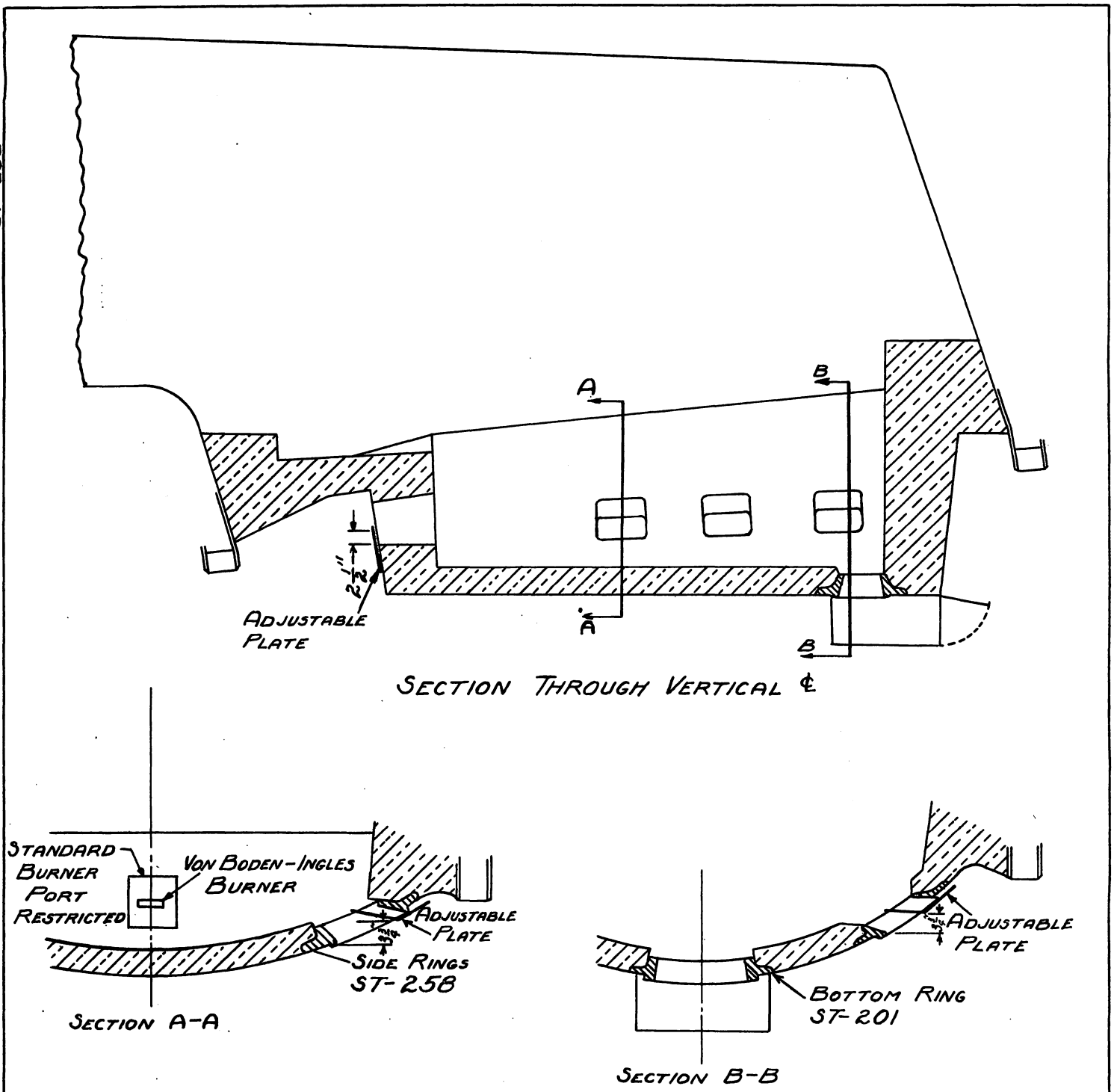

FIRE PAN ARRANGEMENT FDS-23

STANDING TEST ENGINE 4401

STANDING TEST PLANT, SACRAMENTO

JUNE 15, 1949

FIG. 4-99

ST-283

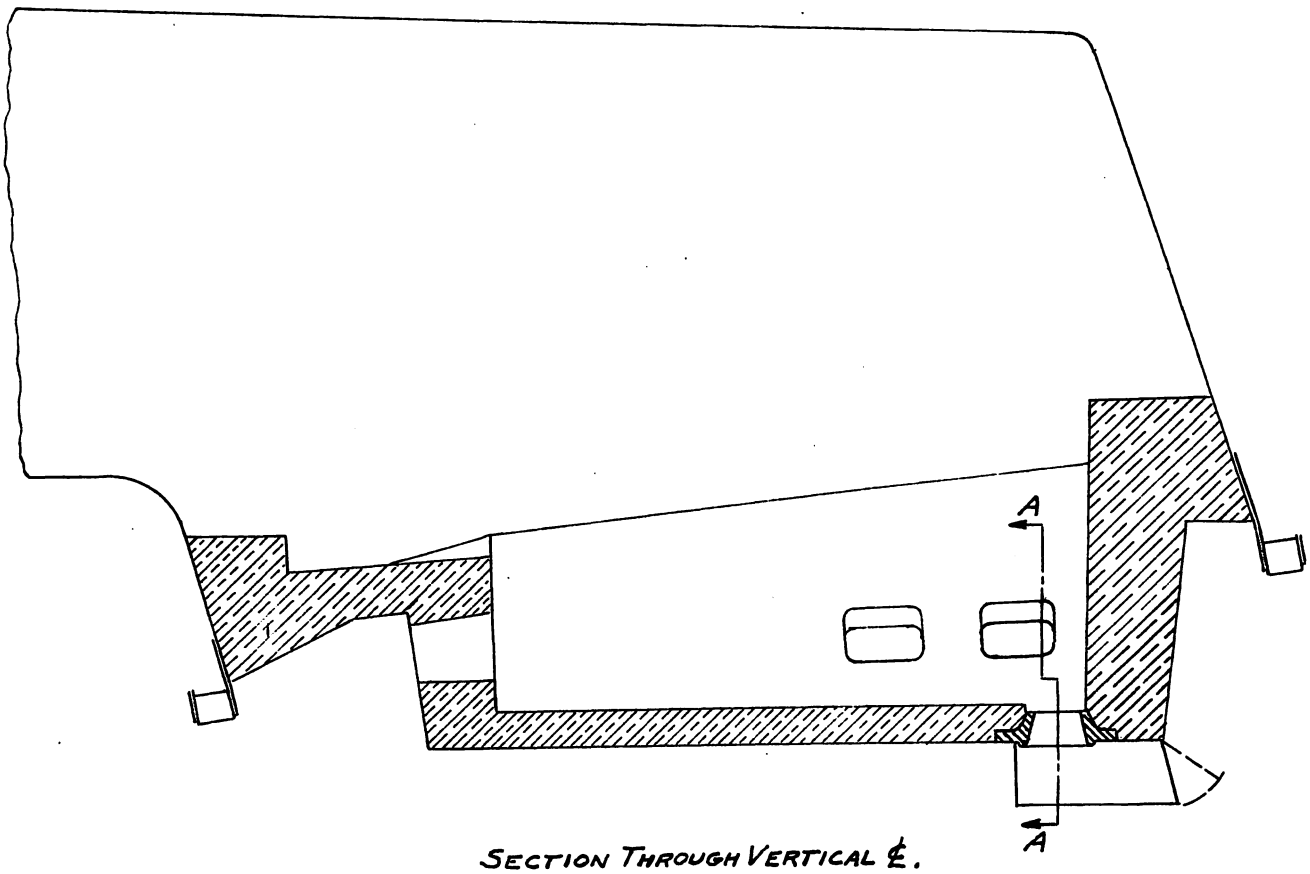

SECTION THROUGH VERTICAL ℄.

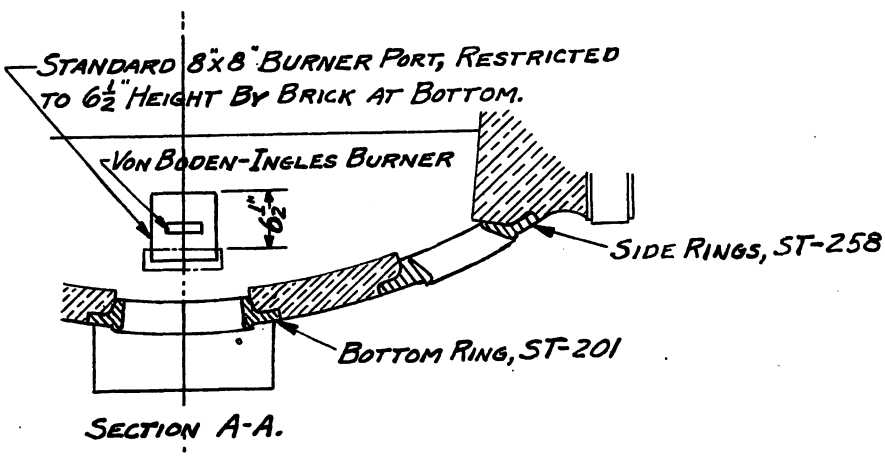

SECTION A-A.

FIRE PAN ARRANGEMENT FDS-24
STANDING TEST ENGINE 4401

STANDING TEST PLANT, SACRAMENTO.

JUNE 15, 1949

FIG. 4-100

ST-284

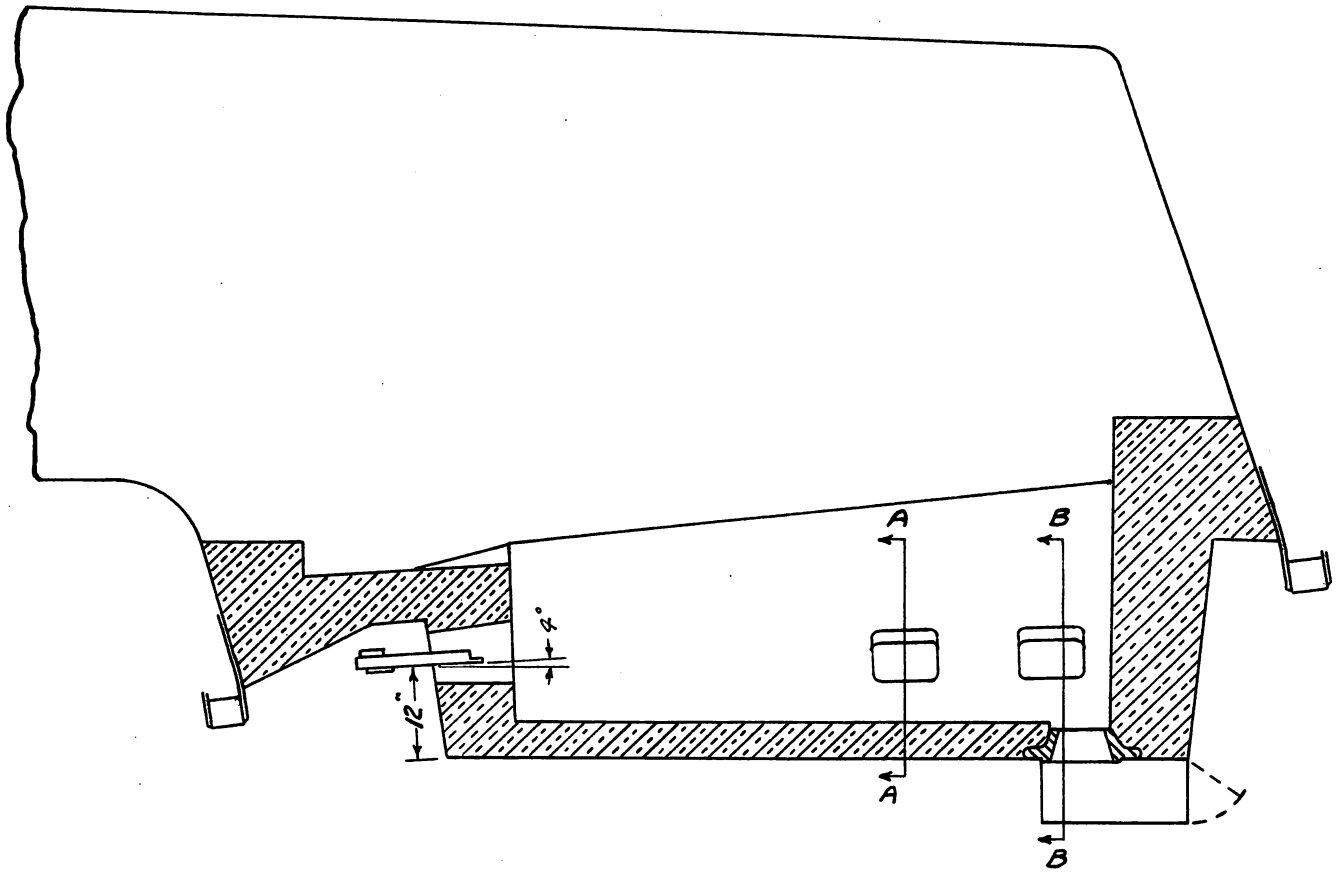

SECTION THROUGH VERTICAL ℄

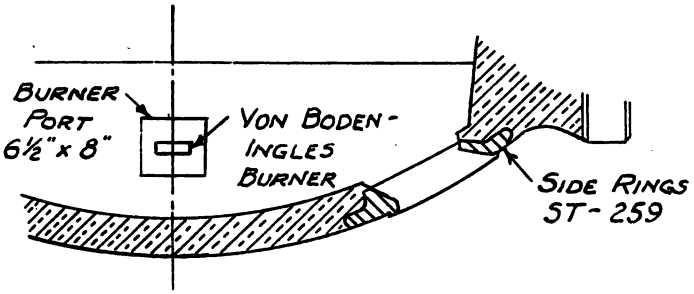

SECTION A-A

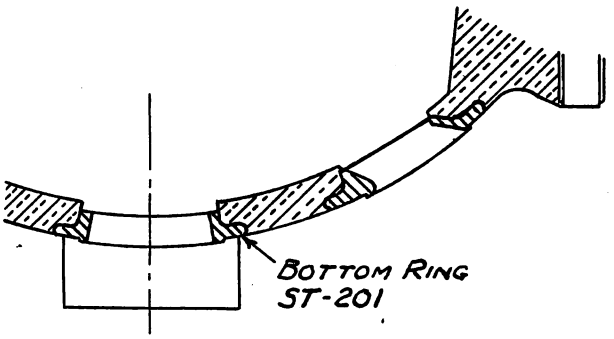

SECTION B-B

FIRE PAN ARRANGEMENT FDS-25

STANDING TEST ENGINE 4401

STANDING TEST PLANT, SACRAMENTO

JUNE 15, 1949

FIG. 4-101

ST-285

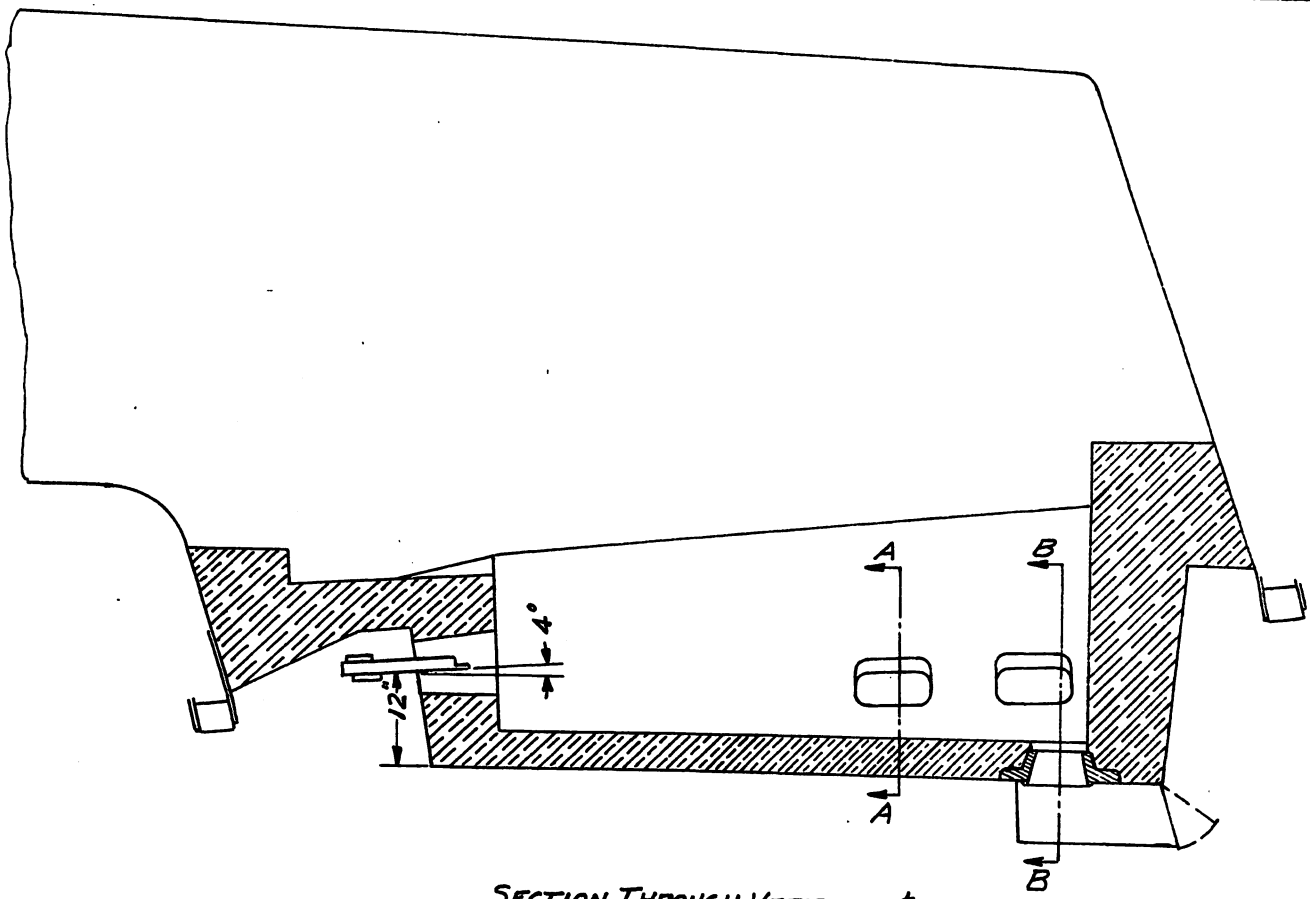

SECTION THROUGH VERTICAL ℄.

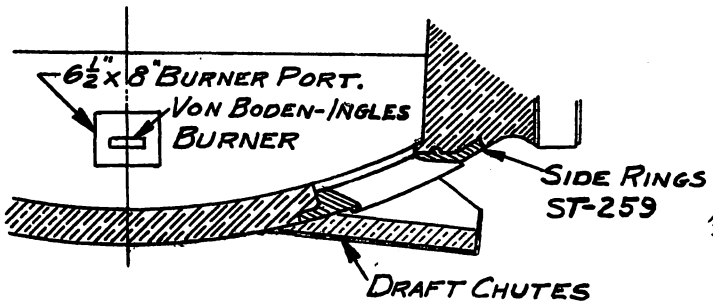

SECTION A-A.

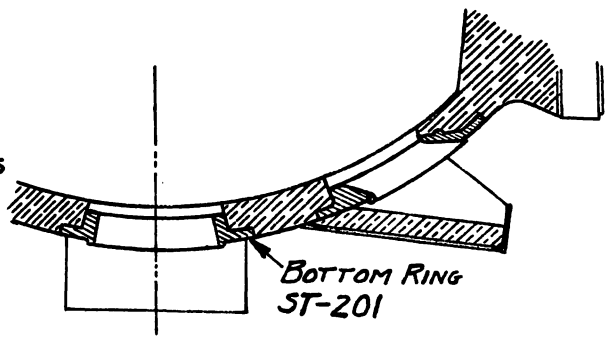

SECTION B-B.

FIRE PAN ARRANGEMENT FDS-26
STANDING TEST ENGINE 4401

STANDING TEST PLANT, SACRAMENTO

JUNE 15, 1949

FIG. 4-102

ST-286

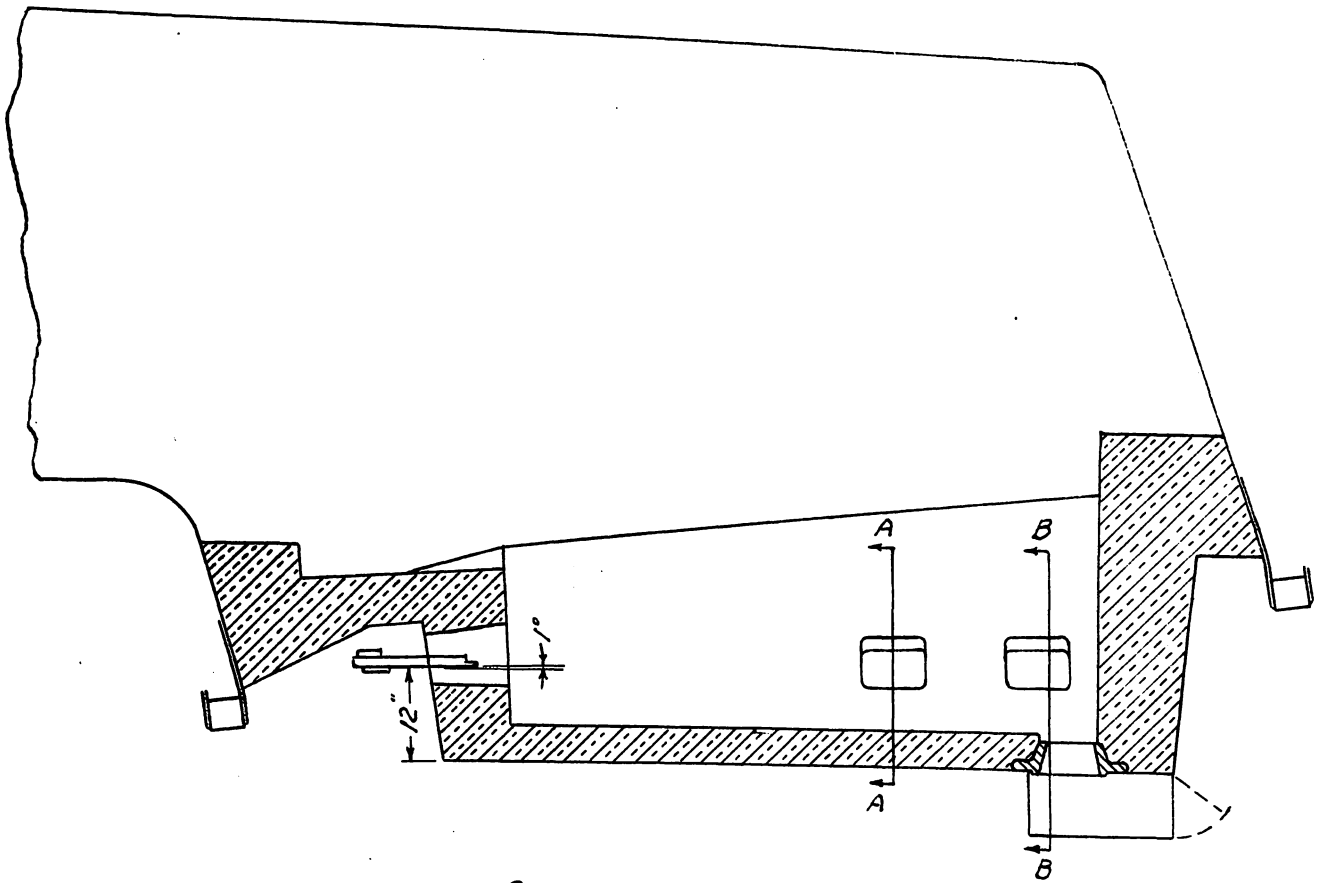

SECTION THROUGH VERTICAL ℄

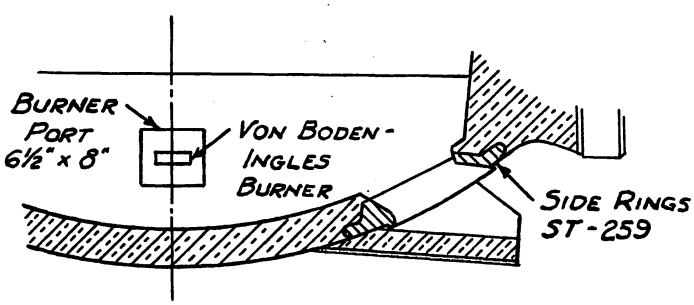

SECTION A-A

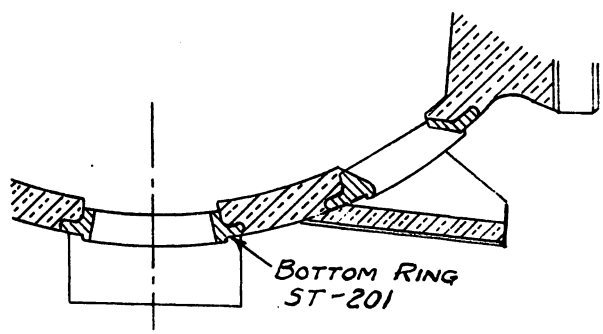

SECTION B-B

FIRE PAN ARRANGEMENT FDS-27

STANDING TEST ENGINE 4401

STANDING TEST PLANT, SACRAMENTO

JUNE 15, 1949

FIG. 4-103

ST-287

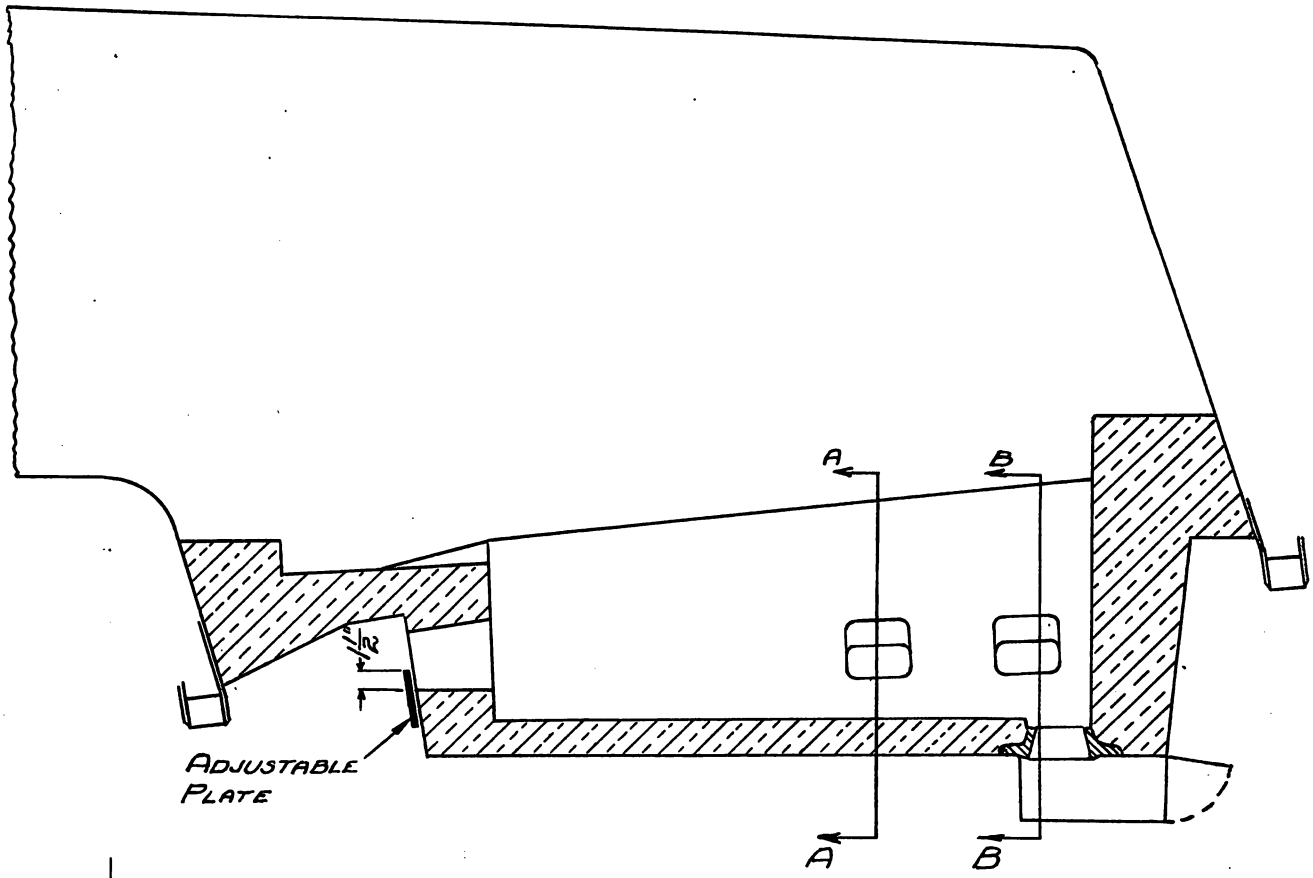

SECTION THROUGH VERTICAL ℄

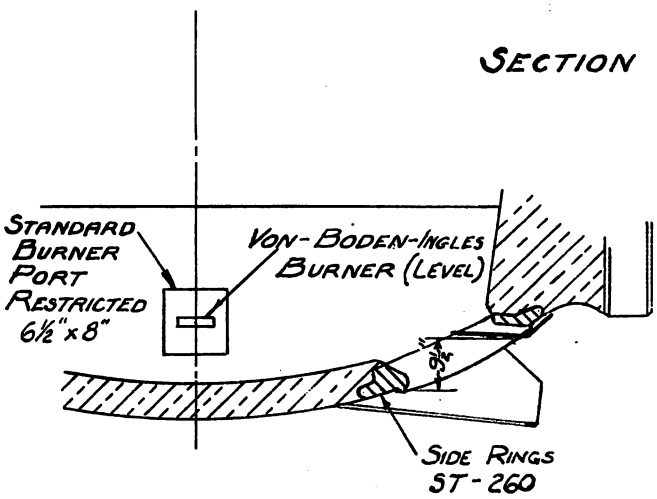

SECTION A-A

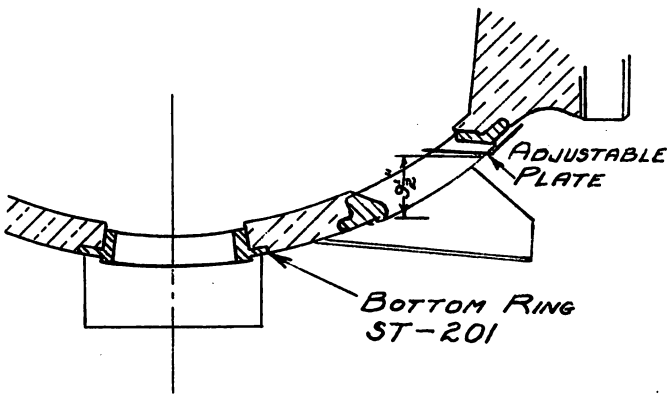

SECTION B-B

FIRE PAN ARRANGEMENT FDS-28

STANDING TEST ENGINE 4401

STANDING TEST PLANT, SACRAMENTO

JUNE 15, 1949

FIG. 4-104

ST-288

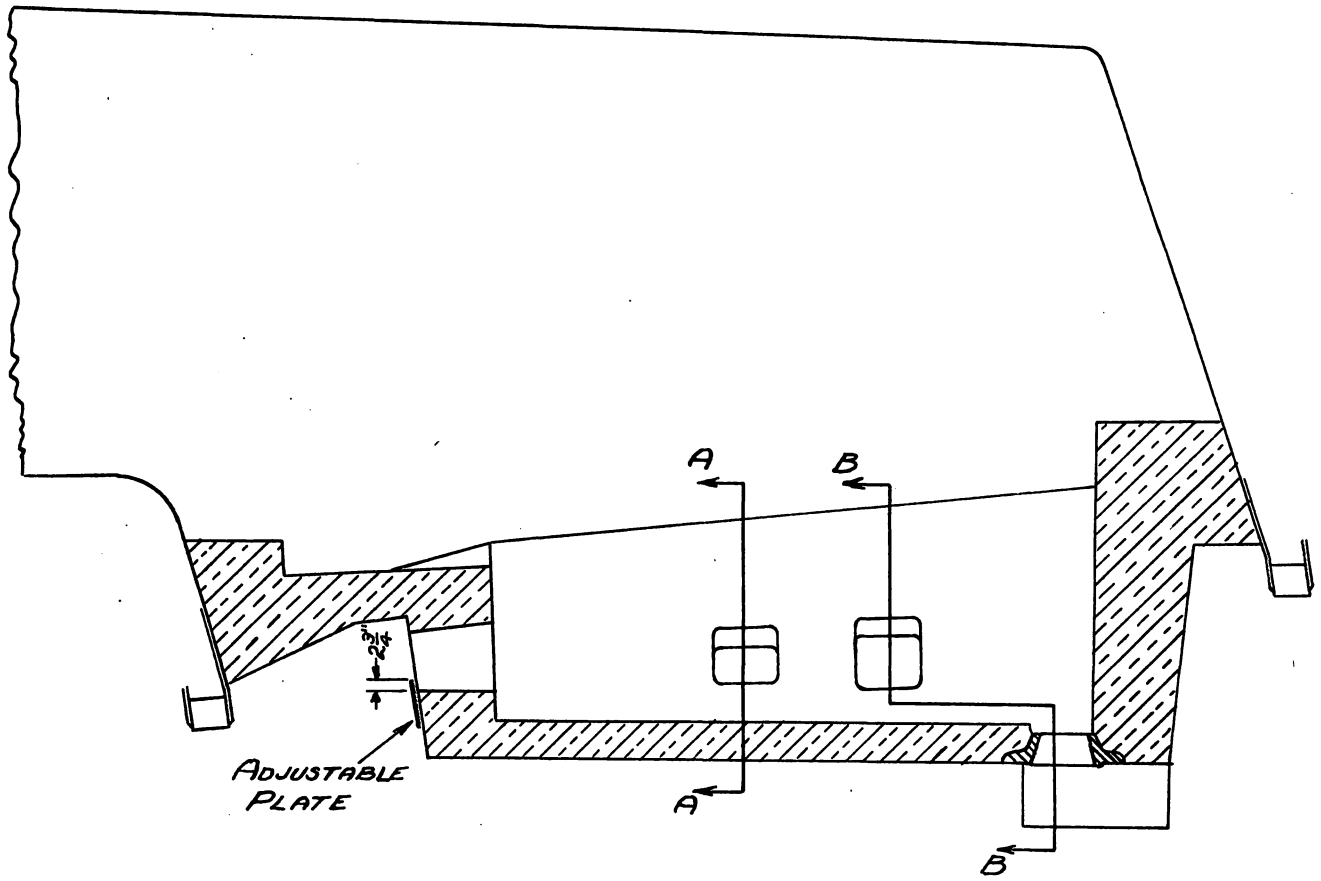

SECTION THROUGH VERTICAL ℄

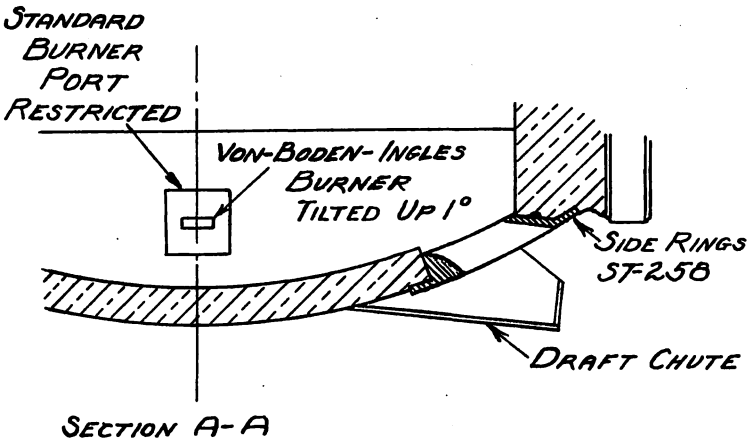

SECTION A-A

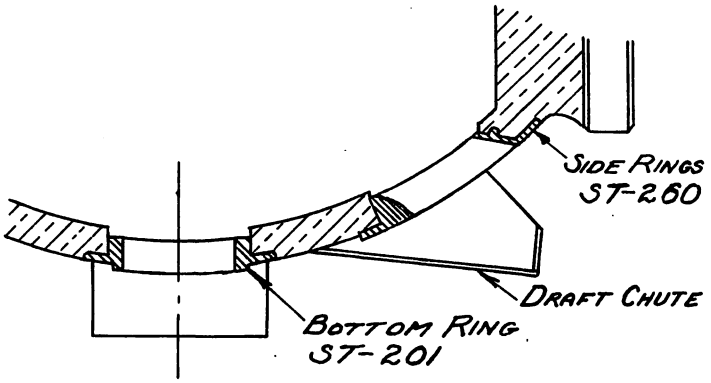

SECTION B-B

FIRE PAN ARRANGEMENT FDS-29

STANDING TEST ENGINE 4401

STANDING TEST PLANT, SACRAMENTO

JUNE 15, 1949

FIG. 4-105

ST-289

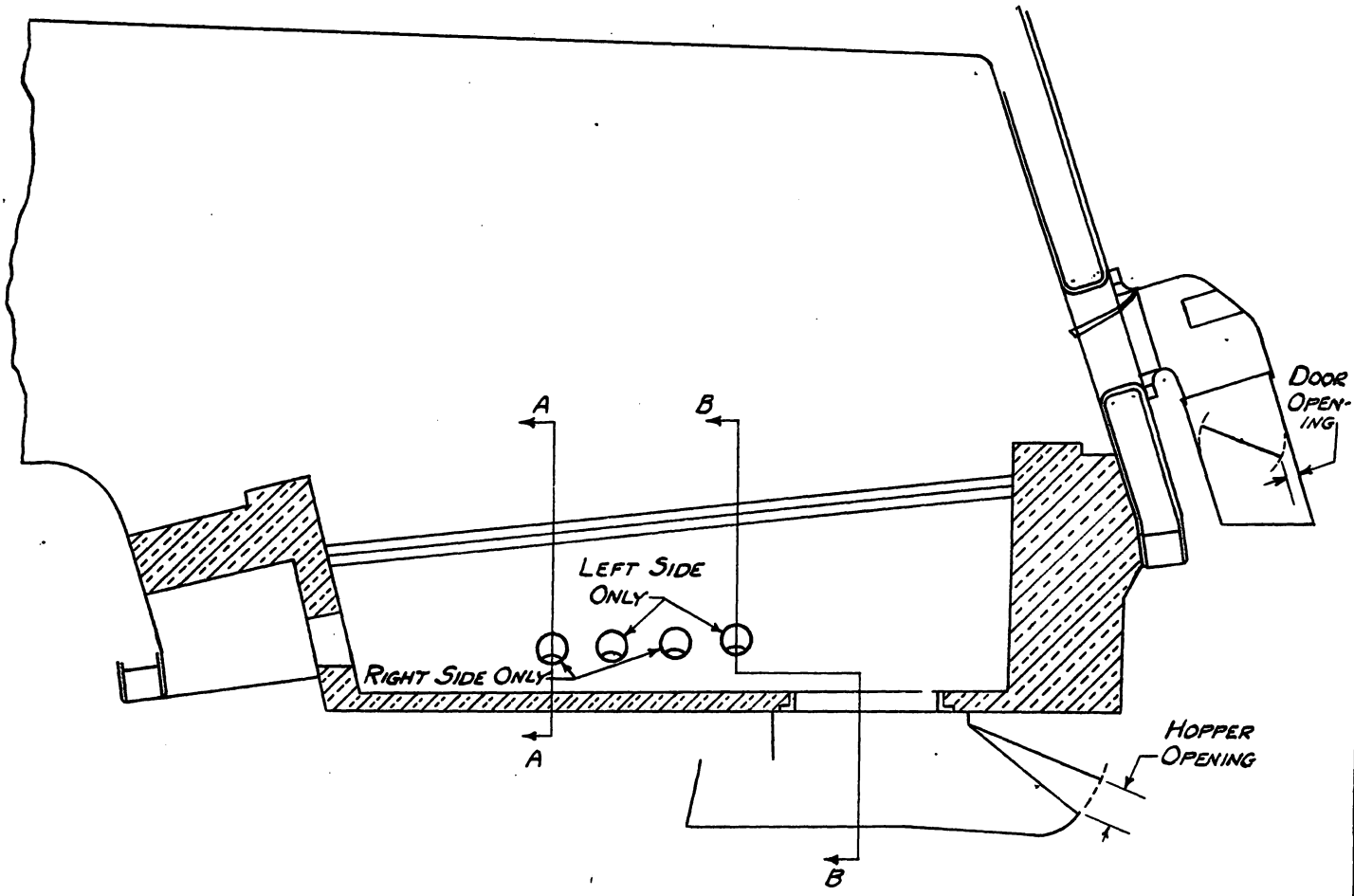

SECTION AT VERTICAL ℄

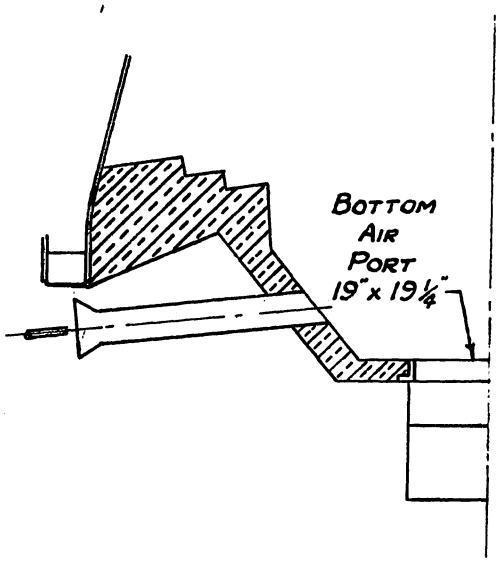

SECTION B-B

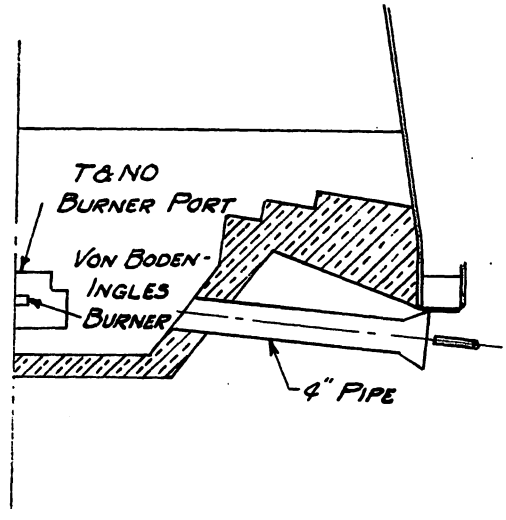

SECTION A-A

FIRE PAN ARRANGEMENT FDT-3
STANDING TEST ENGINE 4401

STANDING TEST PLANT, SACRAMENTO JUNE 15, 1949

FIG. 4-106

ST-290

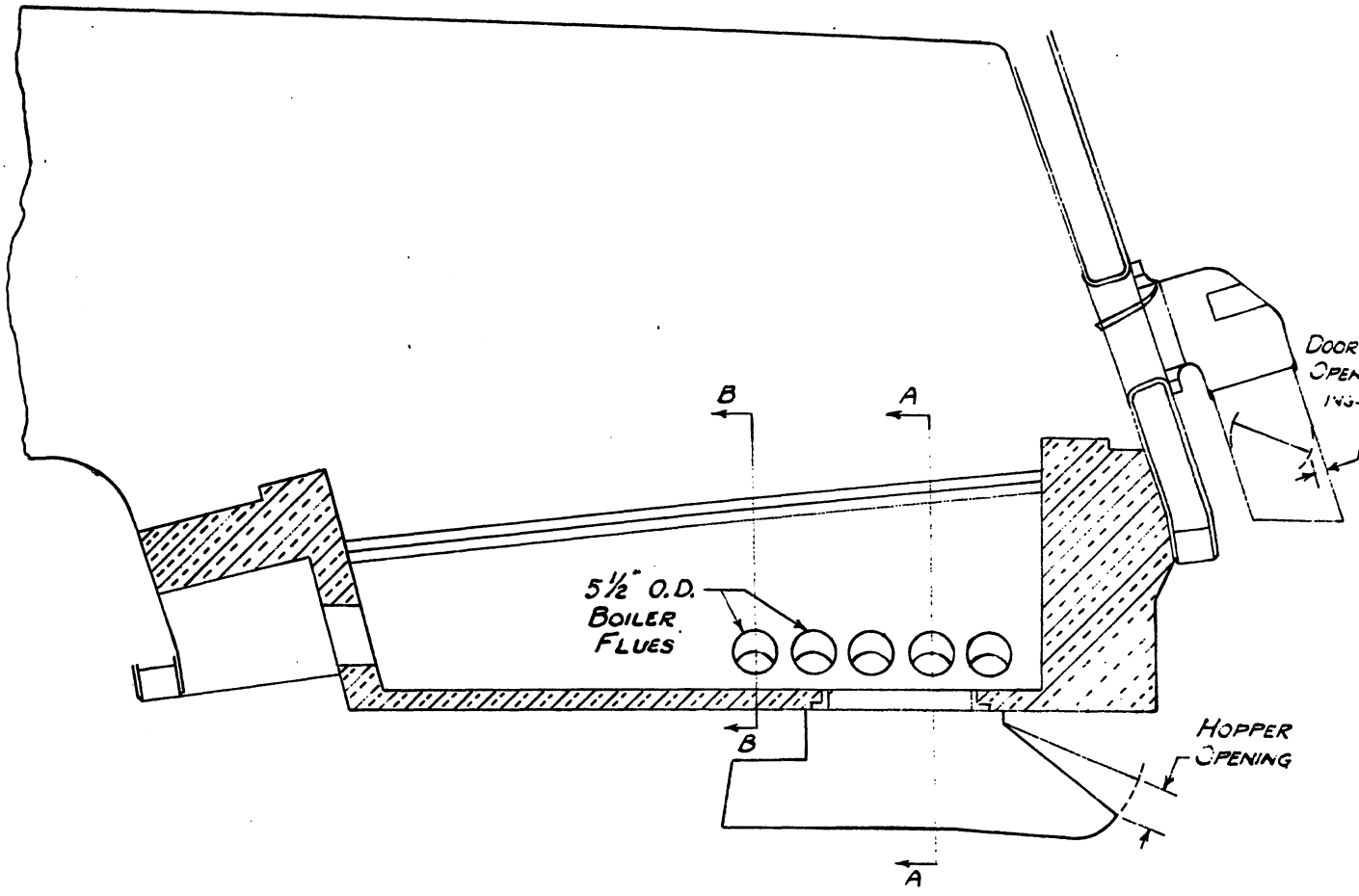

SECTION AT VERTICAL ℄

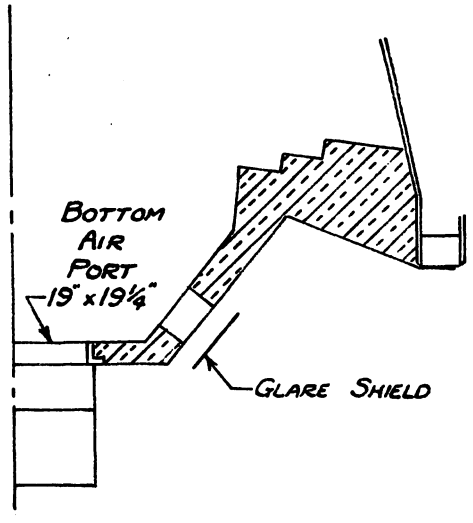

SECTION A-A

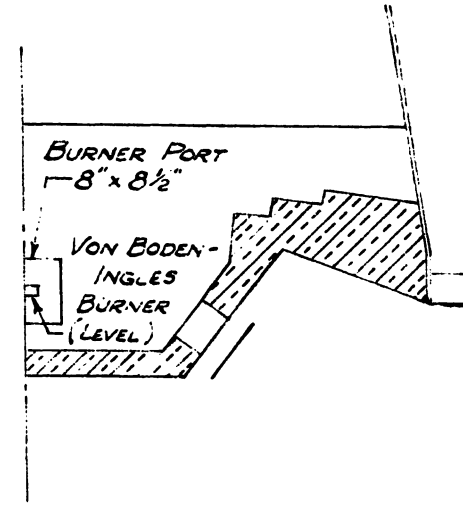

SECTION B-B

FIRE PAN ARRANGEMENT FDT-4
STANDING TEST ENGINE 4401

STANDING TEST PLANT, SACRAMENTO JUNE 15, 1949

FIG. 4-107

ST-291

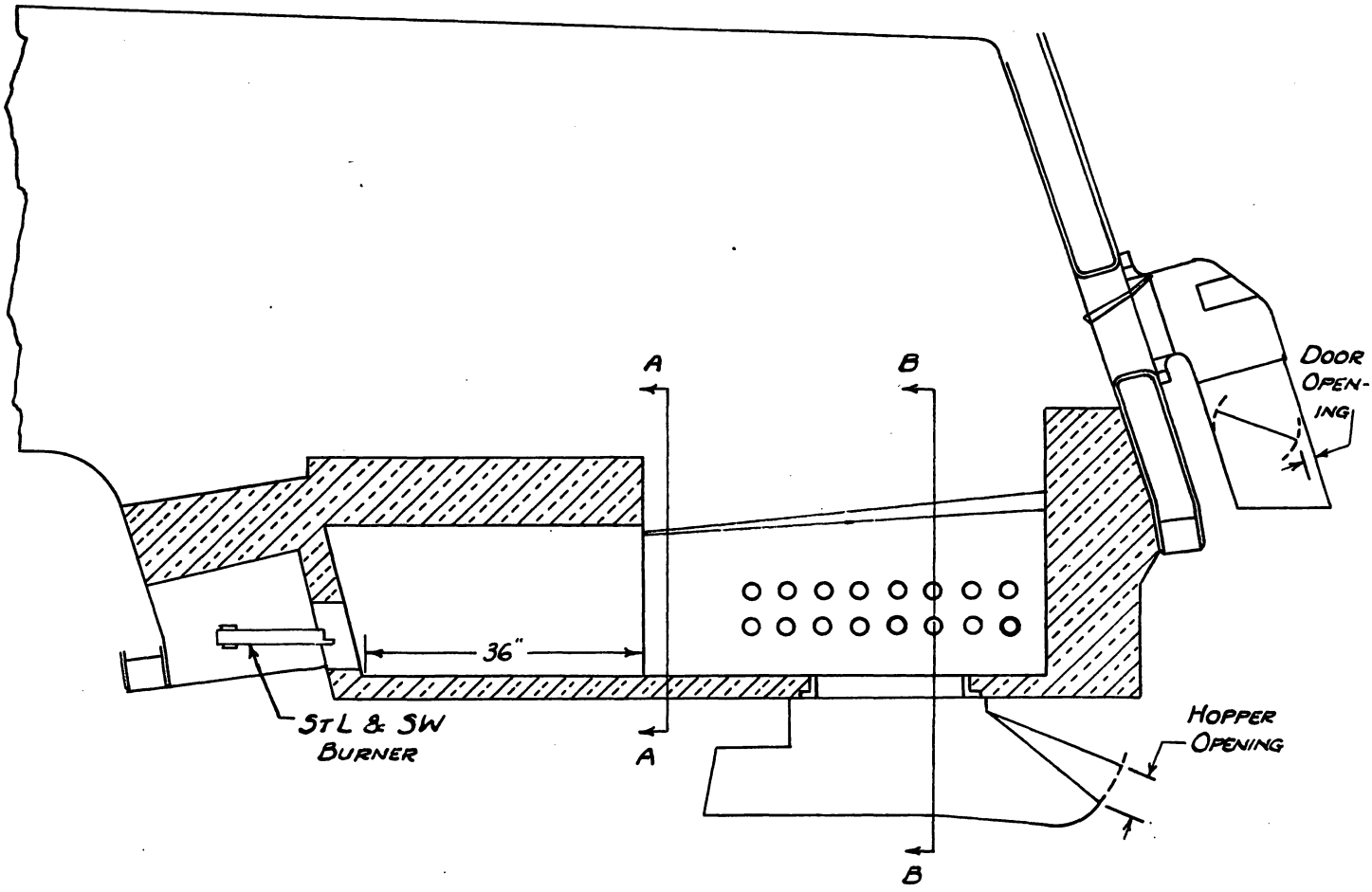

SECTION AT VERTICAL ℄

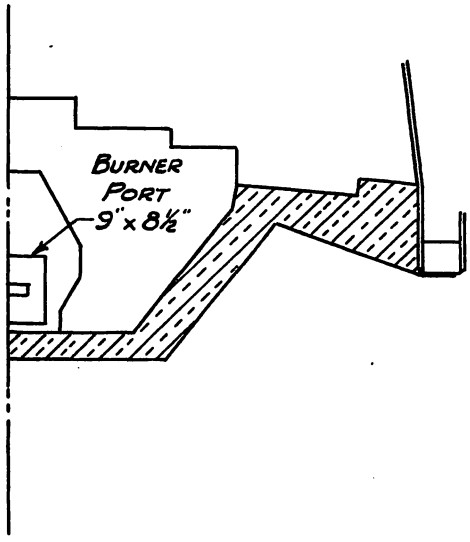

SECTION A-A

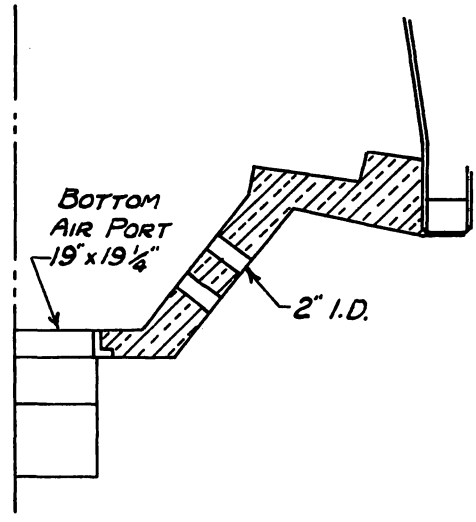

SECTION B-B

FIRE PAN ARRANGEMENT FDT-5
STANDING TEST ENGINE 4401

STANDING TEST PLANT, SACRAMENTO

JUNE 15, 1949

FIG. 4-108

ST-292

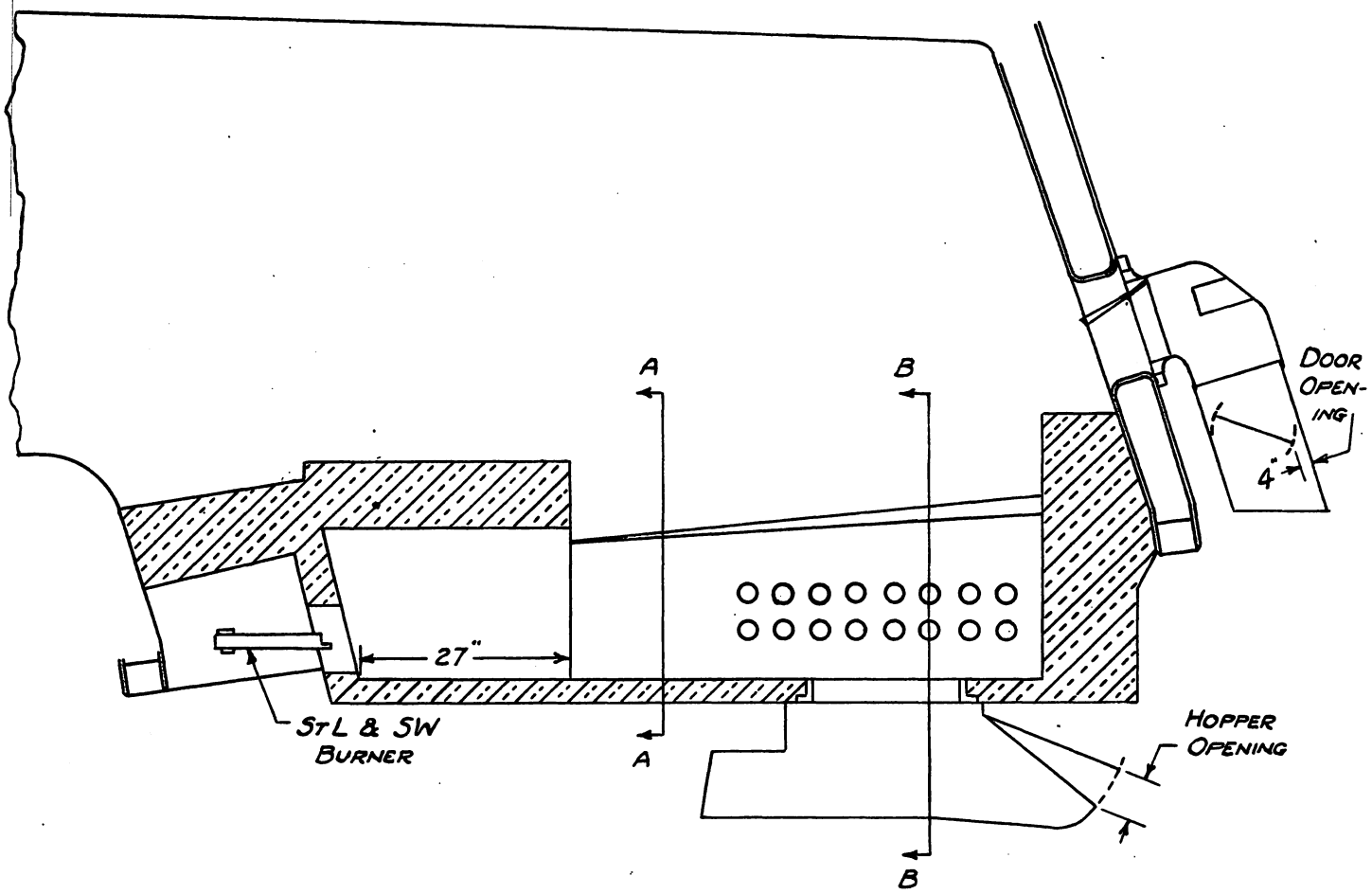

SECTION AT VERTICAL ℄

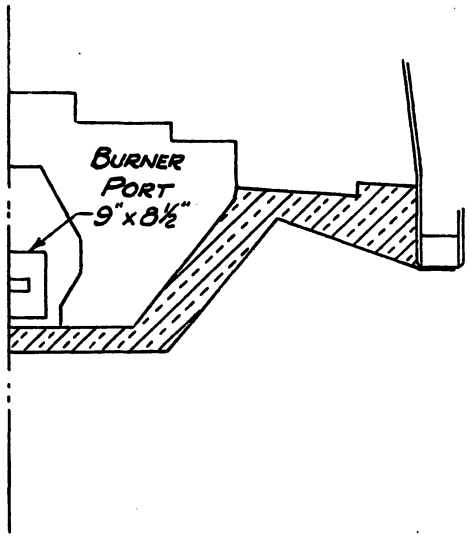

SECTION A-A

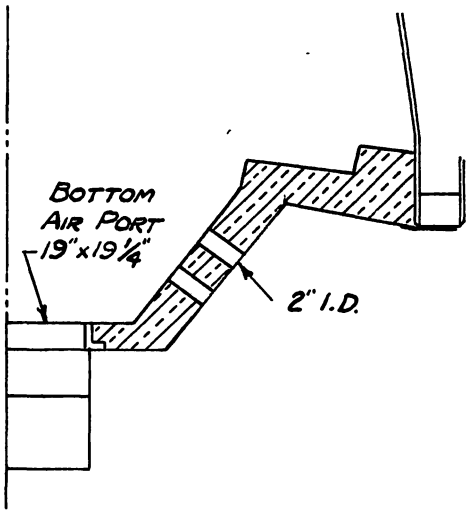

SECTION B-B

FIRE PAN ARRANGEMENT FDT-6
STANDING TEST ENGINE 4401

STANDING TEST PLANT, SACRAMENTO JUNE 15, 1949

FIG. 4-109

ST-293

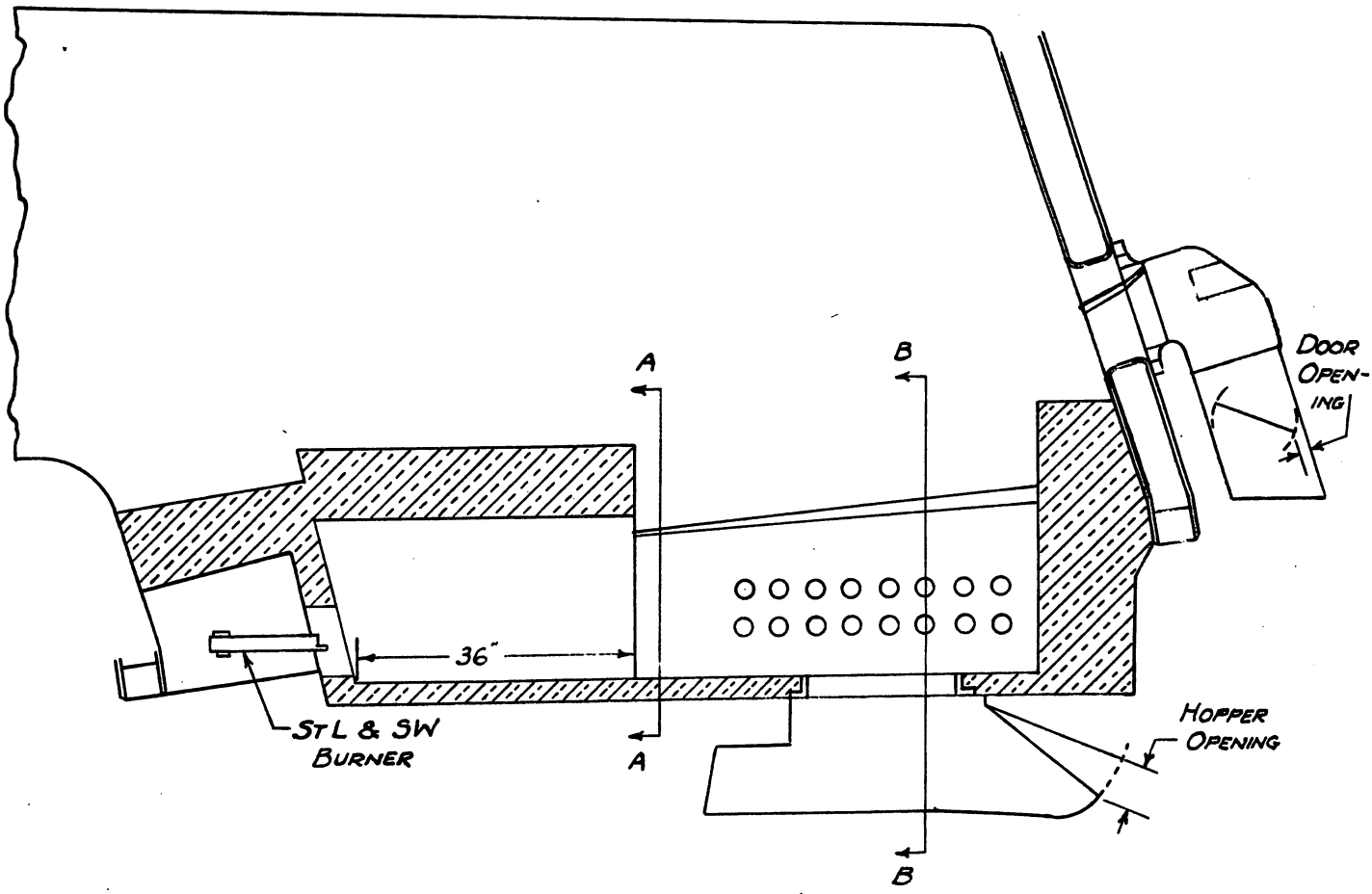

SECTION AT VERTICAL ℄

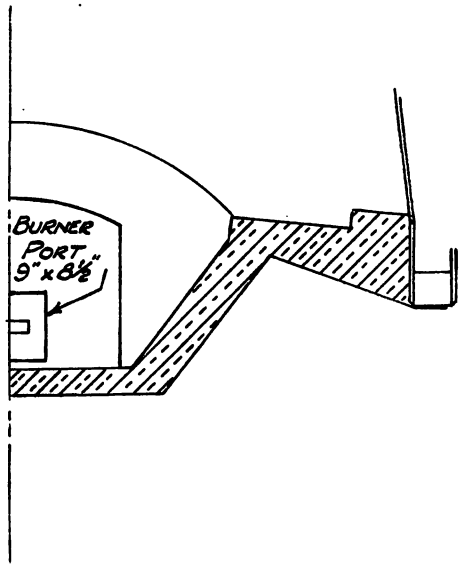

SECTION A-A

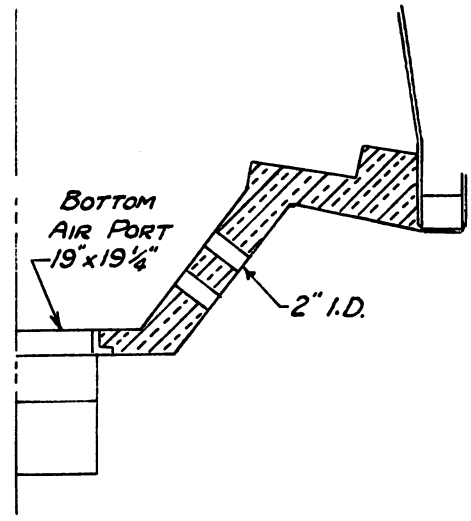

SECTION B-B

FIRE PAN ARRANGEMENT FDT-7
STANDING TEST ENGINE 4401

STANDING TEST PLANT, SACRAMENTO

JUNE 15, 1949

FIG. 4-110

ST-294

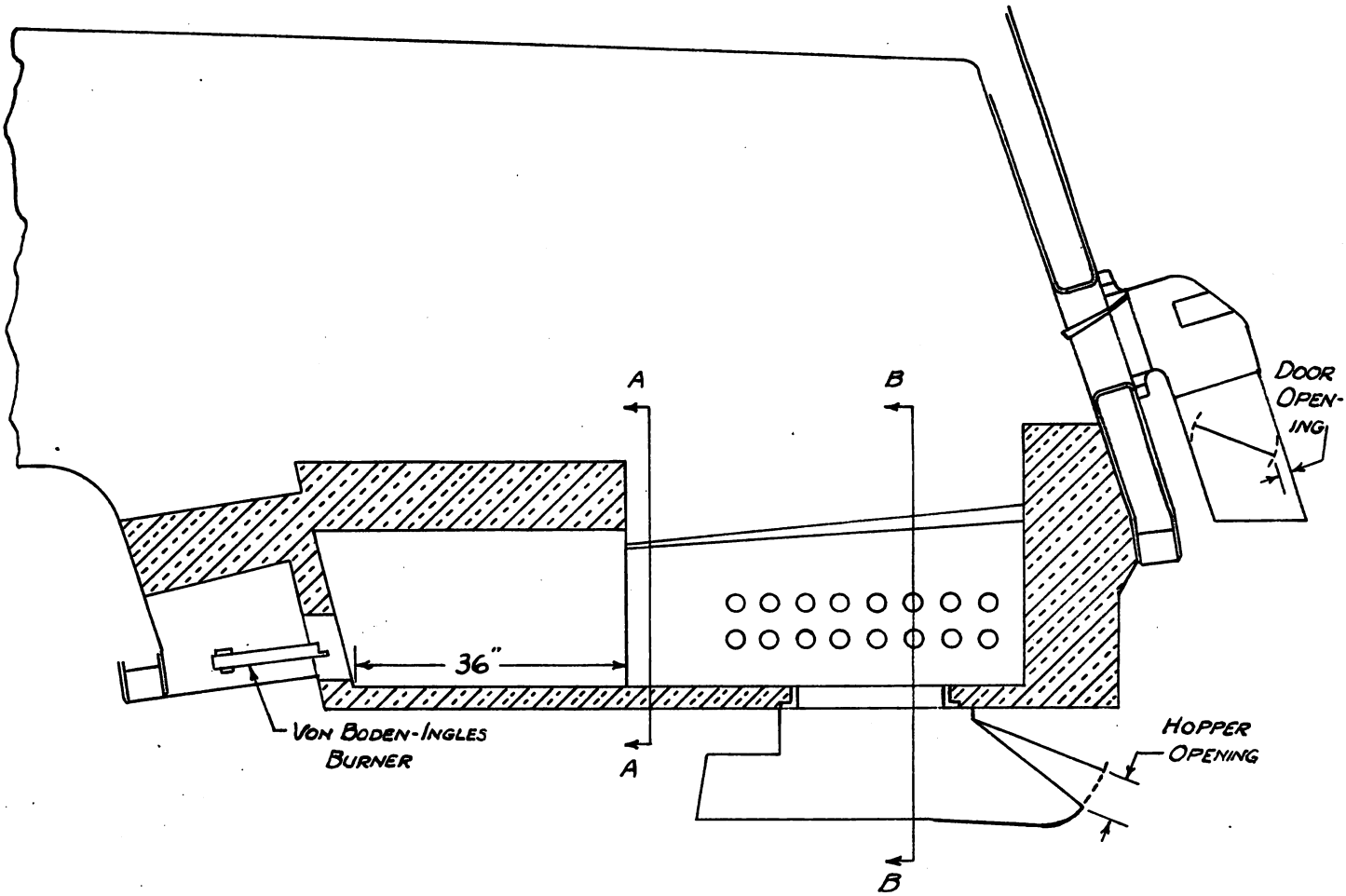

SECTION AT VERTICAL ℄

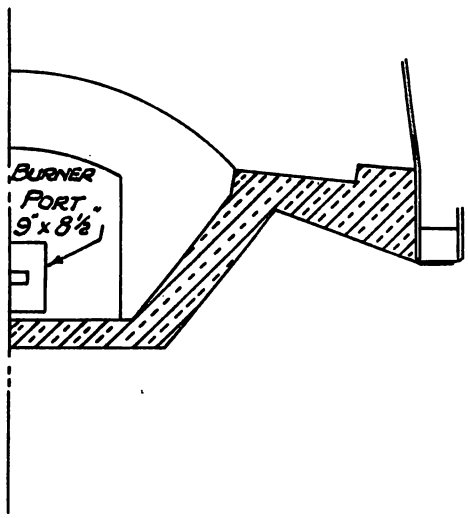

SECTION A-A

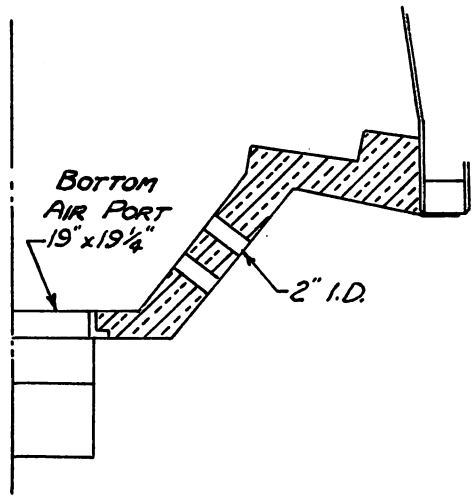

SECTION B-B

FIRE PAN ARRANGEMENT FDT-8
STANDING TEST ENGINE 4401

STANDING TEST PLANT, SACRAMENTO

JUNE 15, 1949

FIG. 4-111

ST-295

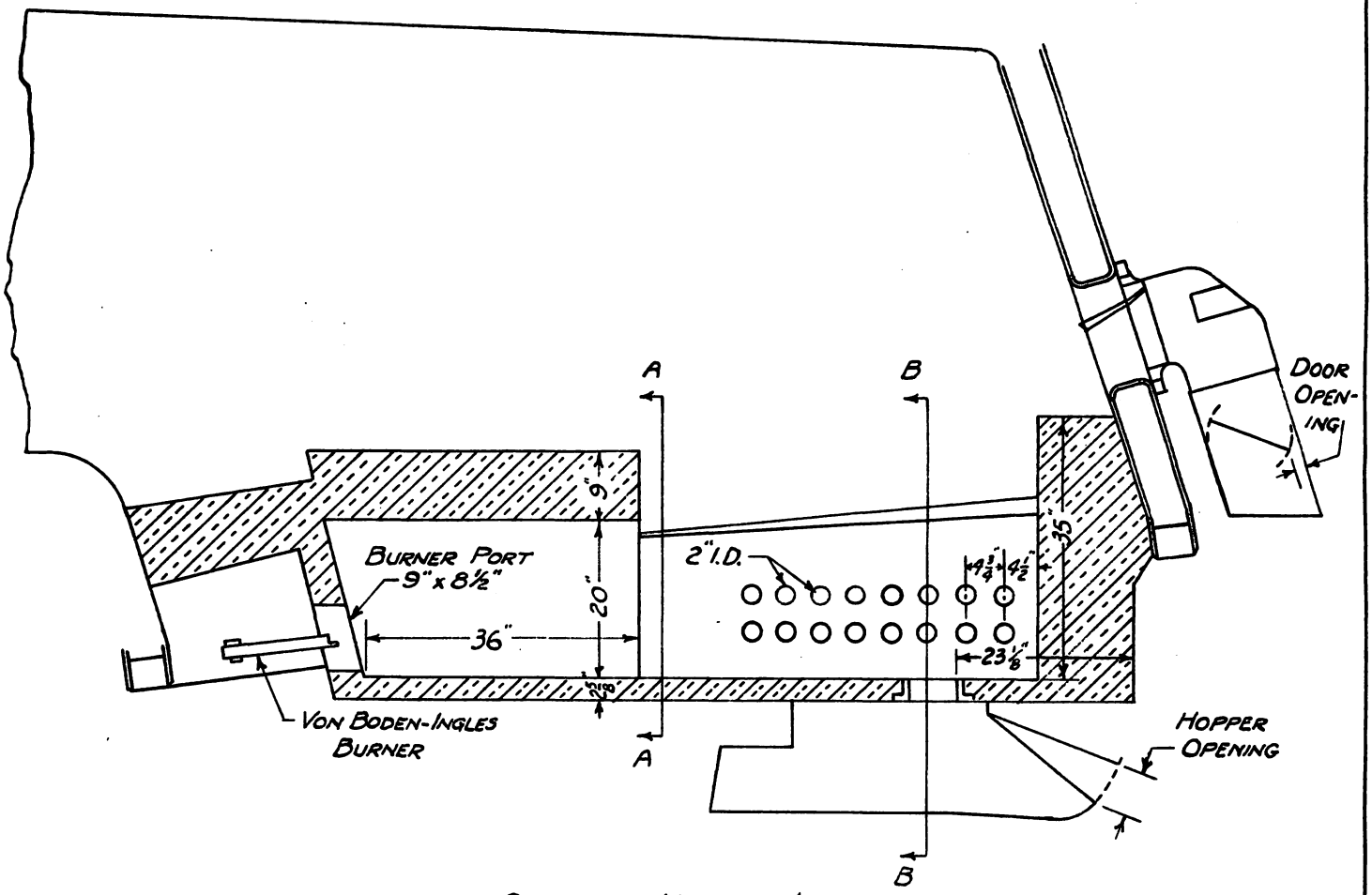

SECTION AT VERTICAL ℄

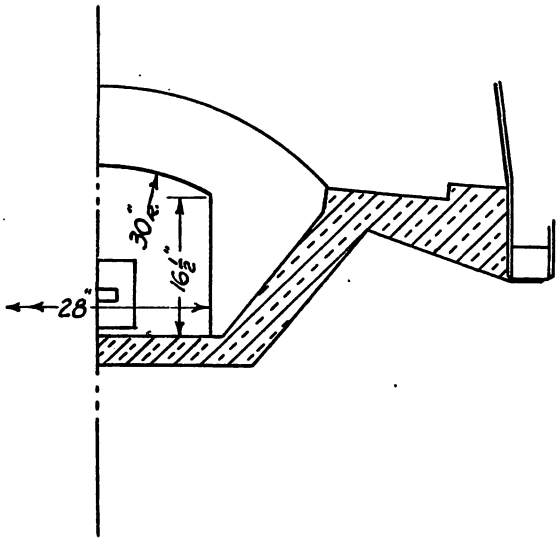

SECTION A-A

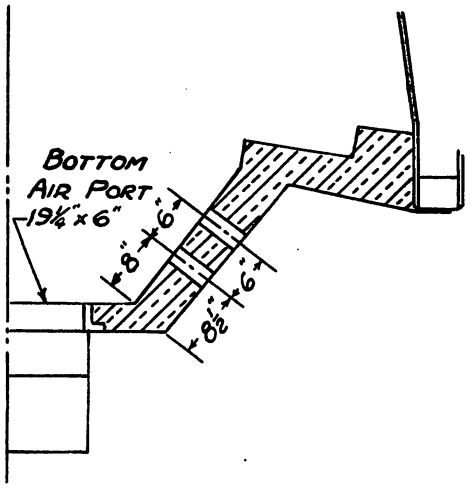

SECTION B-B

FIRE PAN ARRANGEMENT FDT-9
STANDING TEST ENGINE 4401

STANDING TEST PLANT, SACRAMENTO JUNE 15, 1949

FIG. 4-112

ST-37-1

Photo 4 - 1 Glare shield for Pacific Lines standard firepan, test installation FDS-12, modified for tests by application of hinges to facilitate access to side air ports for observations and adjustments.

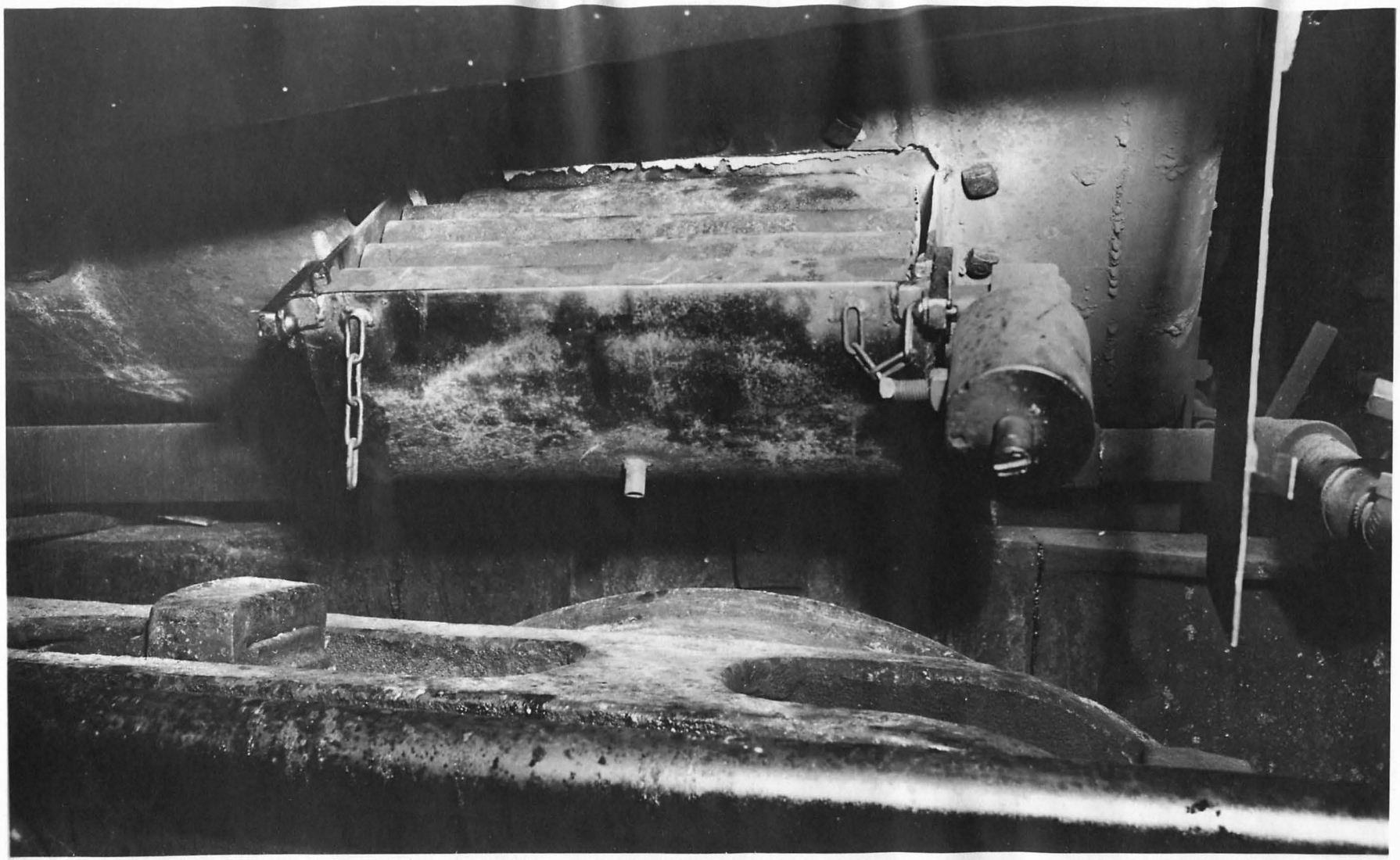

ST-49-5
Photo 4 - 2 Pacific Lines standard damper and draft chutes for test firepan FDS-12, showing balanced damper in closed position.

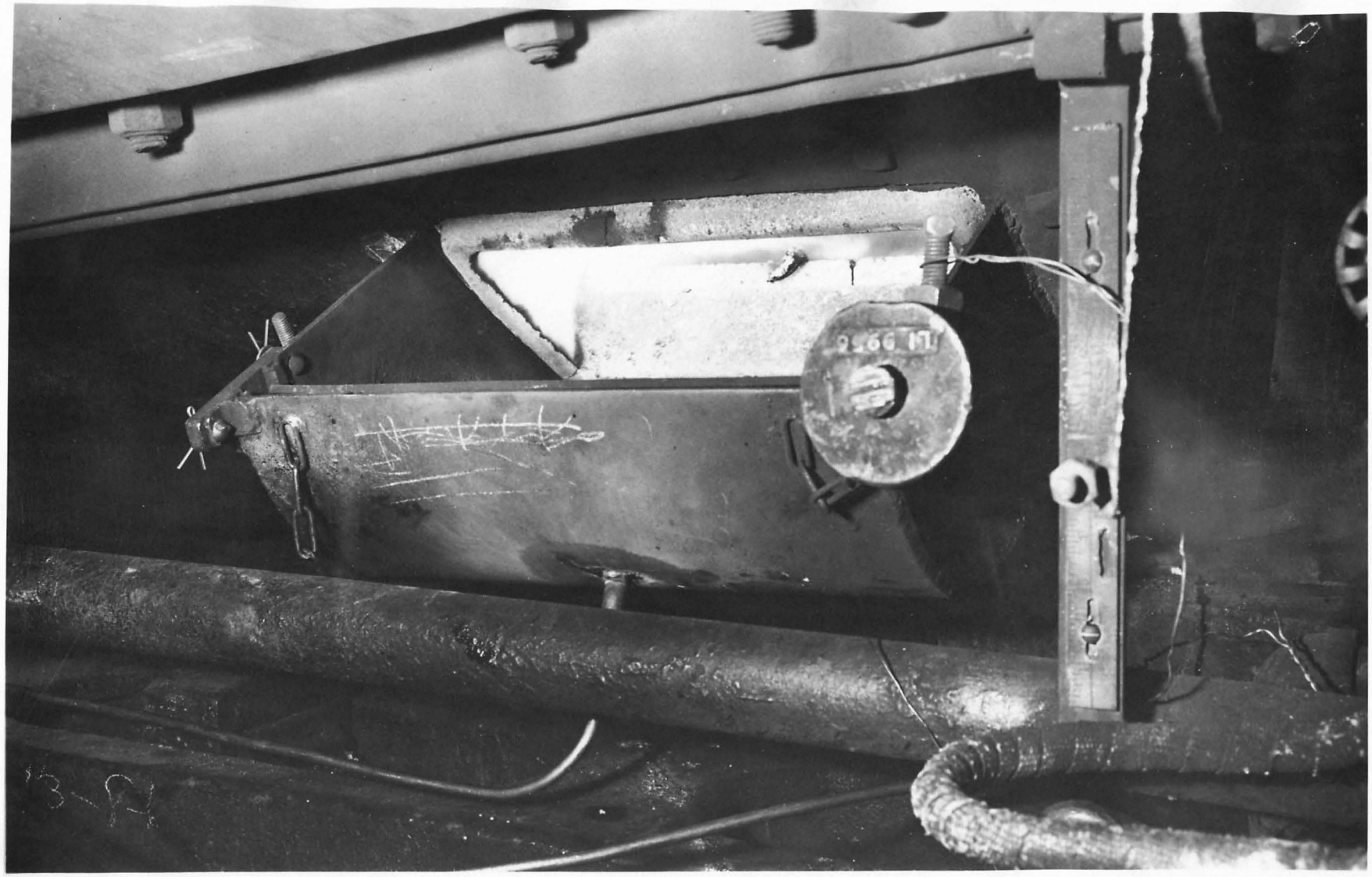

ST-33-1

Photo 4 - 3 Side draft chute with damper in open position during test at high steaming rate. Bright area in left of draft casting is fire which is not swept from surface by entering air. This condition also exists at top and right surfaces of castings not visible here.

ST-36-2
Photo 4 - 4 View of Battelle design elliptical approach or bell mouth side air ports as applied to Pacific Lines standard firepan for test arrangement FDS-1.

ST-36-4
Photo 4 - 5 Battelle design combination glare shield and hopper for the elliptical approach or bell mouth side air ports, test arrangement FDS-1

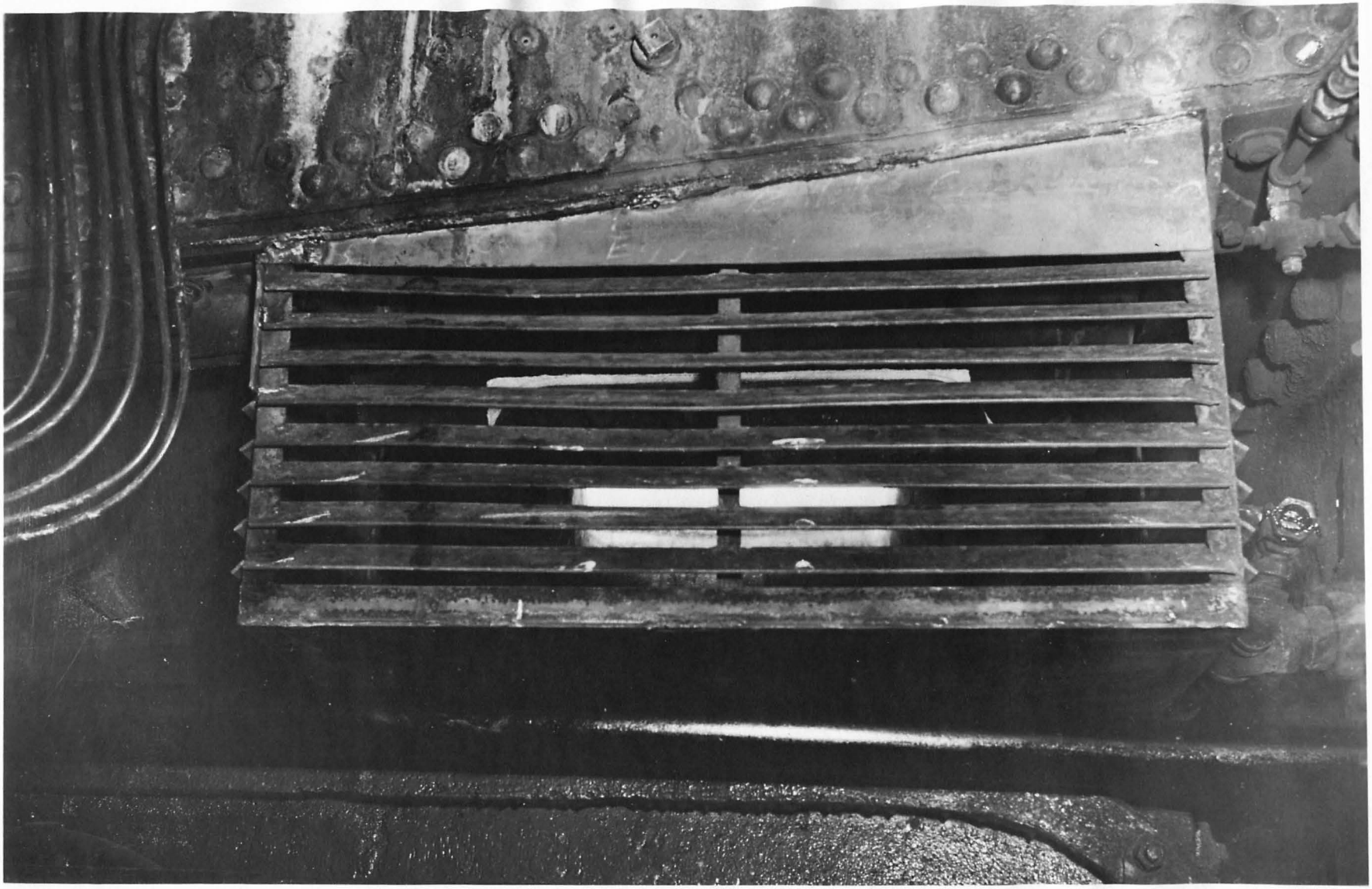

ST-36-3
Photo 4 - 6 View of Battelle design glare shields during test operation, showing visibility of fire (bright area) through glare shields. Test arrangement FDS-1.

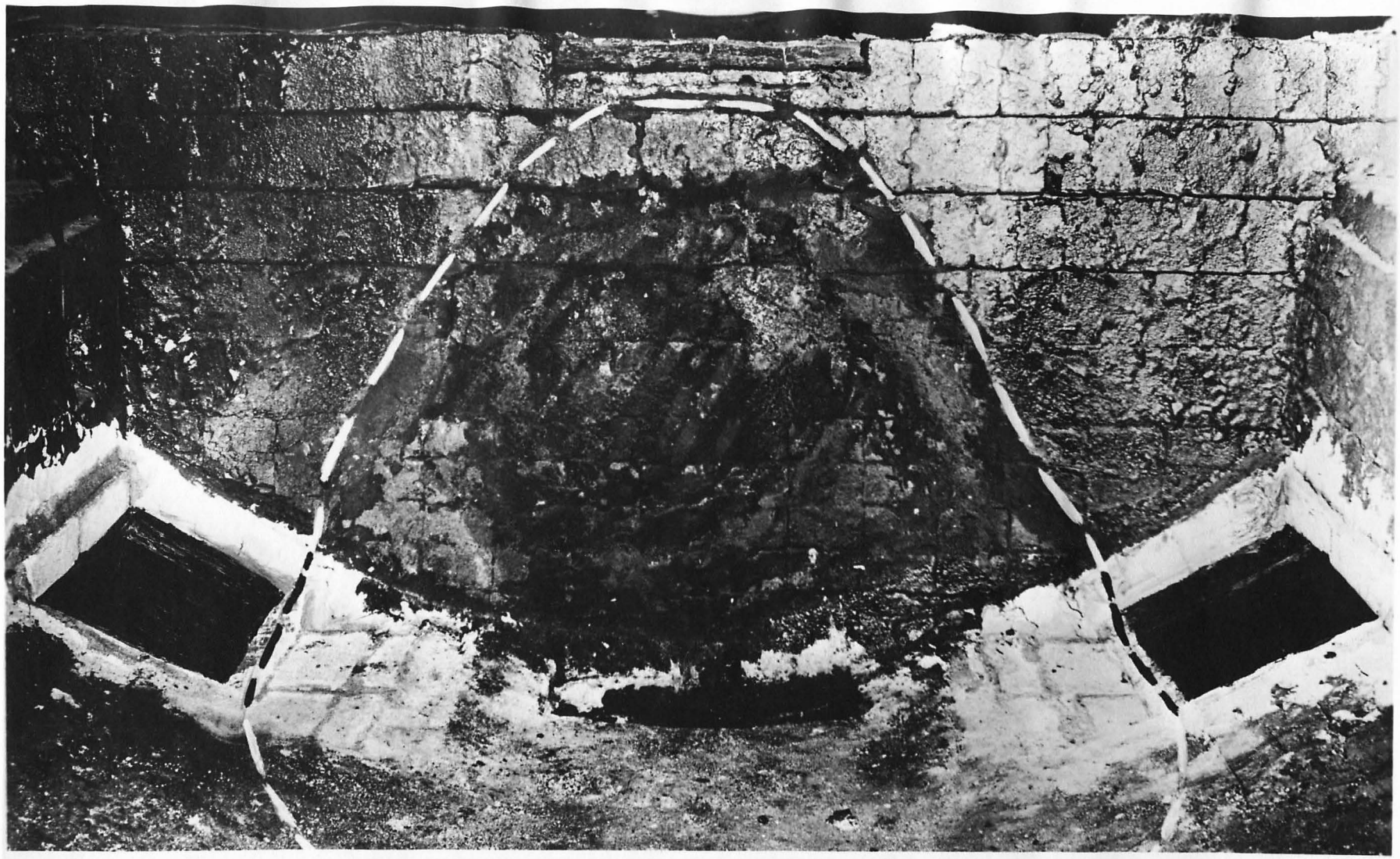

ST-37-3

Photo 4 - 7 Interior of firebox showing flash wall and air ports, with dashed line enclosing area of carbon accumulation during tests FDS-1 with elliptical approach air ports and illustrating that combustion air continued radial to pan after entering firebox.

ST-37-2
Photo 4 - 8 Exterior view of rounded approach or modified bell mouth air port with air directed horizontally into firepan. Draft arrangements FDS-2, 3 and 4.

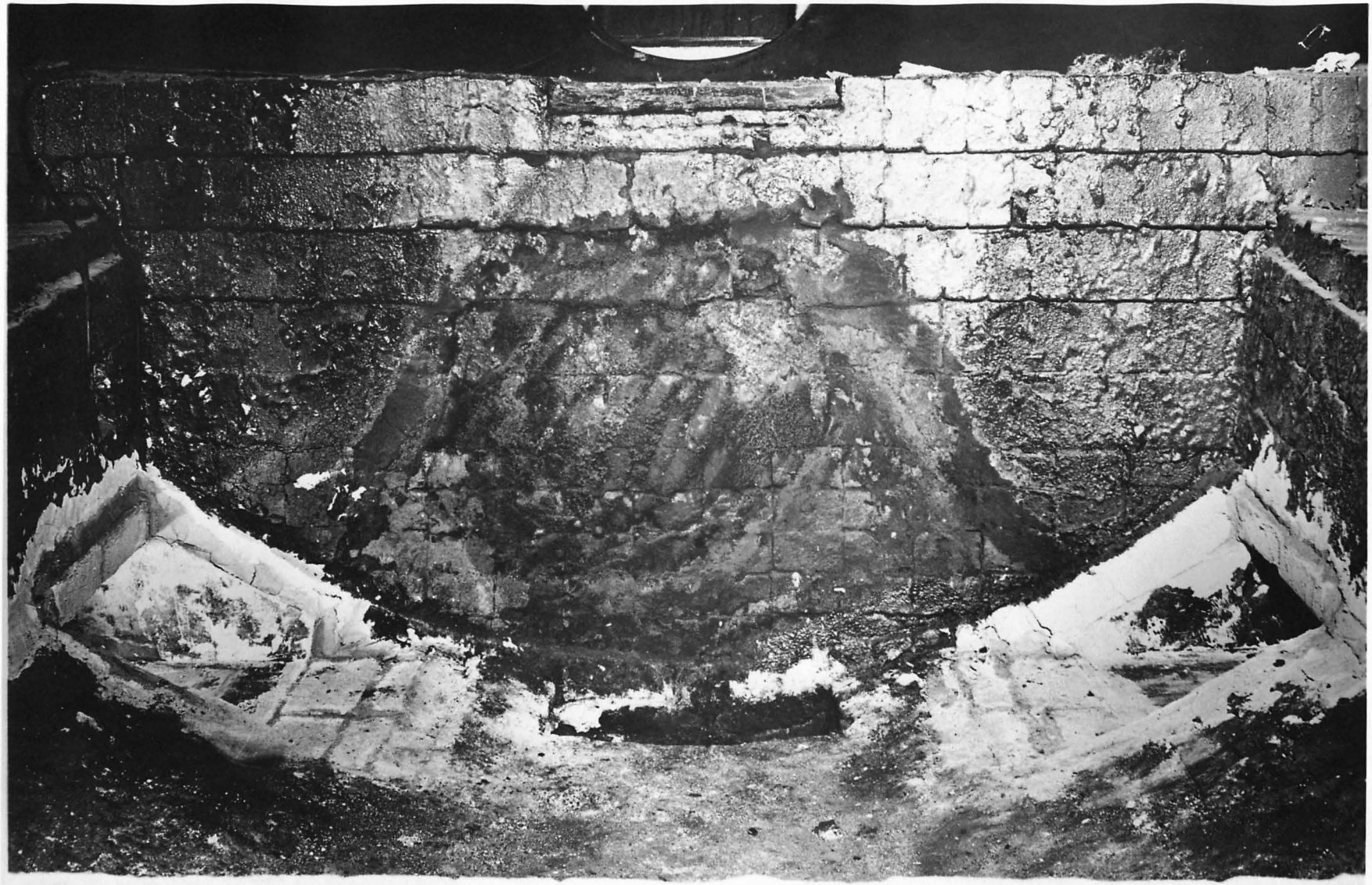

ST-37-3
Photo 4 - 9 Interior view of firepan with rounded approach, horizontally directed, air ports, test arrangement FDS-3.

ST-37-6
Photo 4 - 10 Application of rounded approach to 2-5/8" x 17" fixed opening in bottom hopper for arrangement FDS-2 and others following.

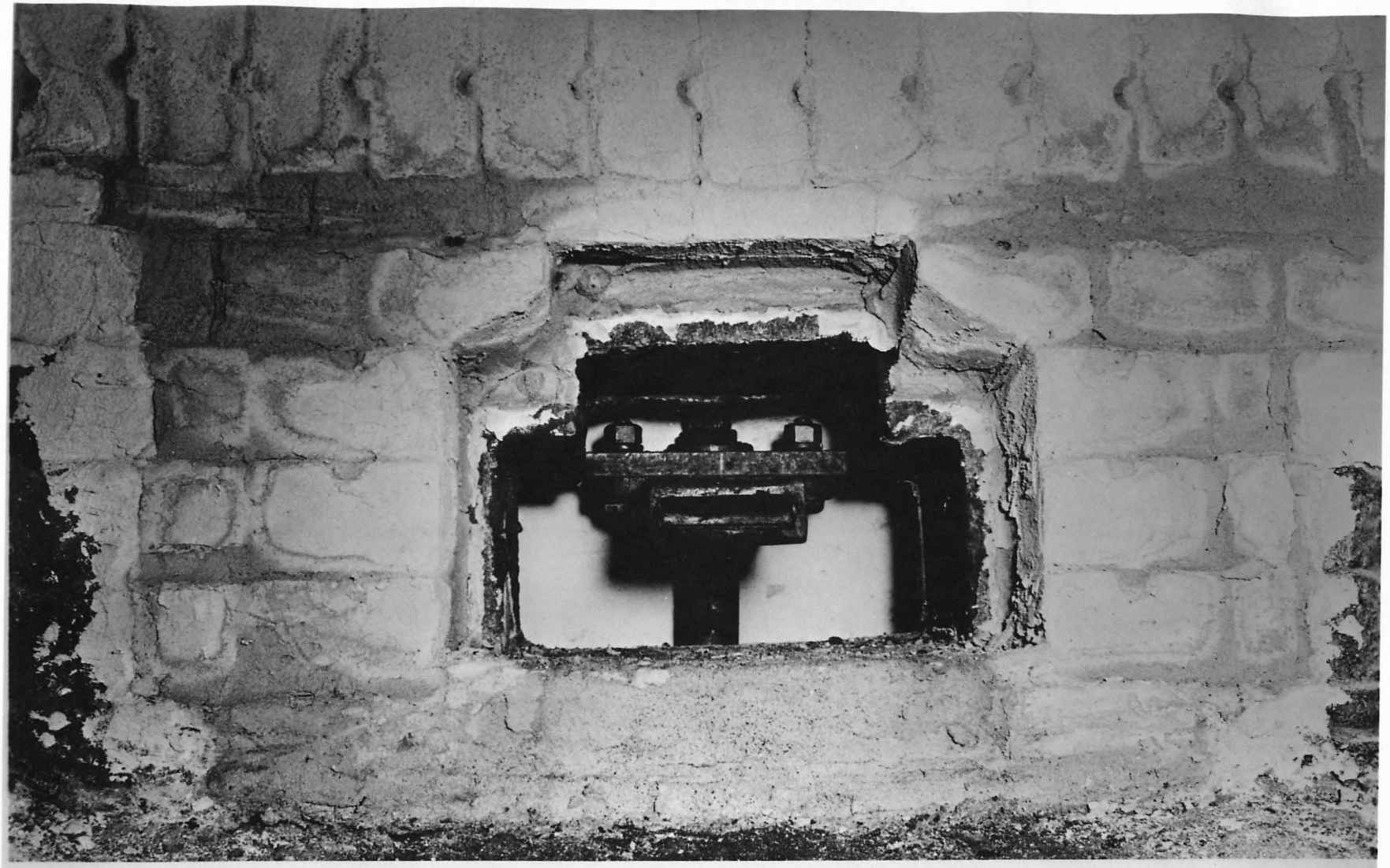

ST-37-4
Photo 4 - 11 Interior view of T&NO style burner port showing burner in place and illustrating proportions of opening above and below burner.

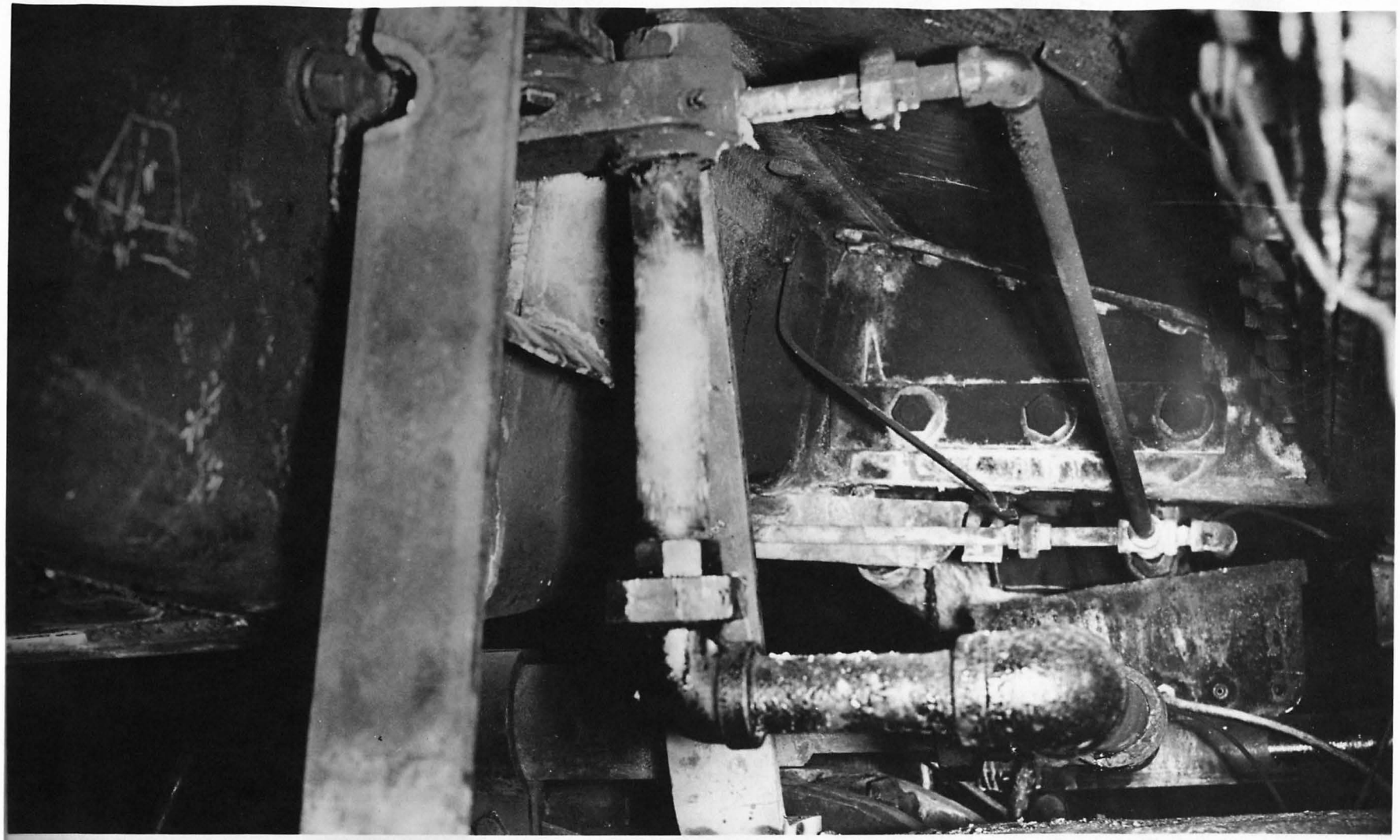

ST-37-5
Photo 4 - 12 Exterior view of burner application, T&NO style with T&NO burner port, with portion of rounded approach as applied to port for arrangement FDS-3 visible between bracket and fuel pipe.

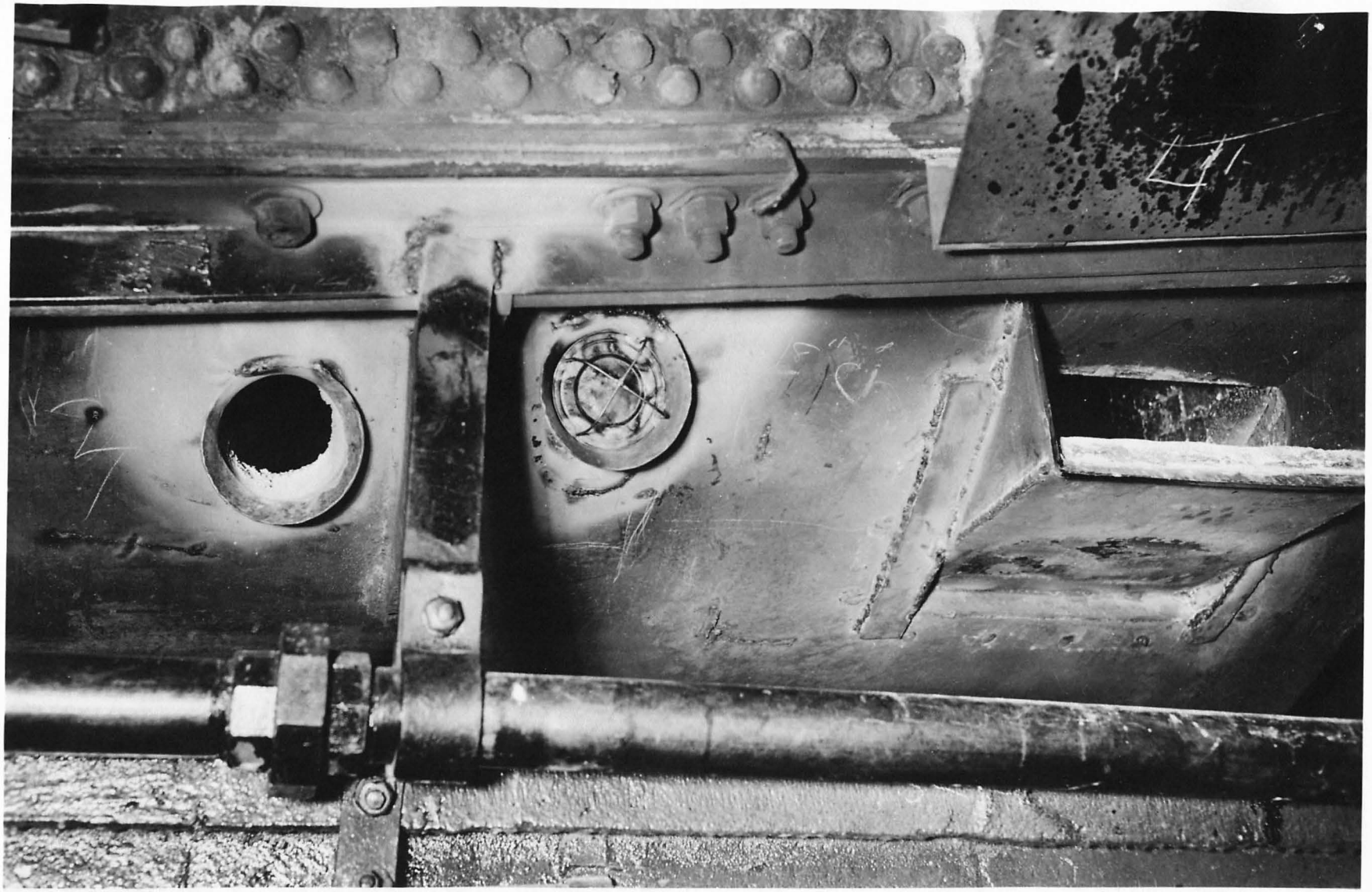

ST-51-1
Photo 4 - 13 Exterior view of modified bell mouth air ports, arrangement FDS-4, with 2, 5-1/2" flue air ports each side, added for trial and showing method of temporarily closing tube holes during trials.

ST-51-2
Photo 4 - 14 Interior view of modified bell mouth air ports, arrangement FDS-4, with two 5-1/2" flue air ports each side, added for trial.

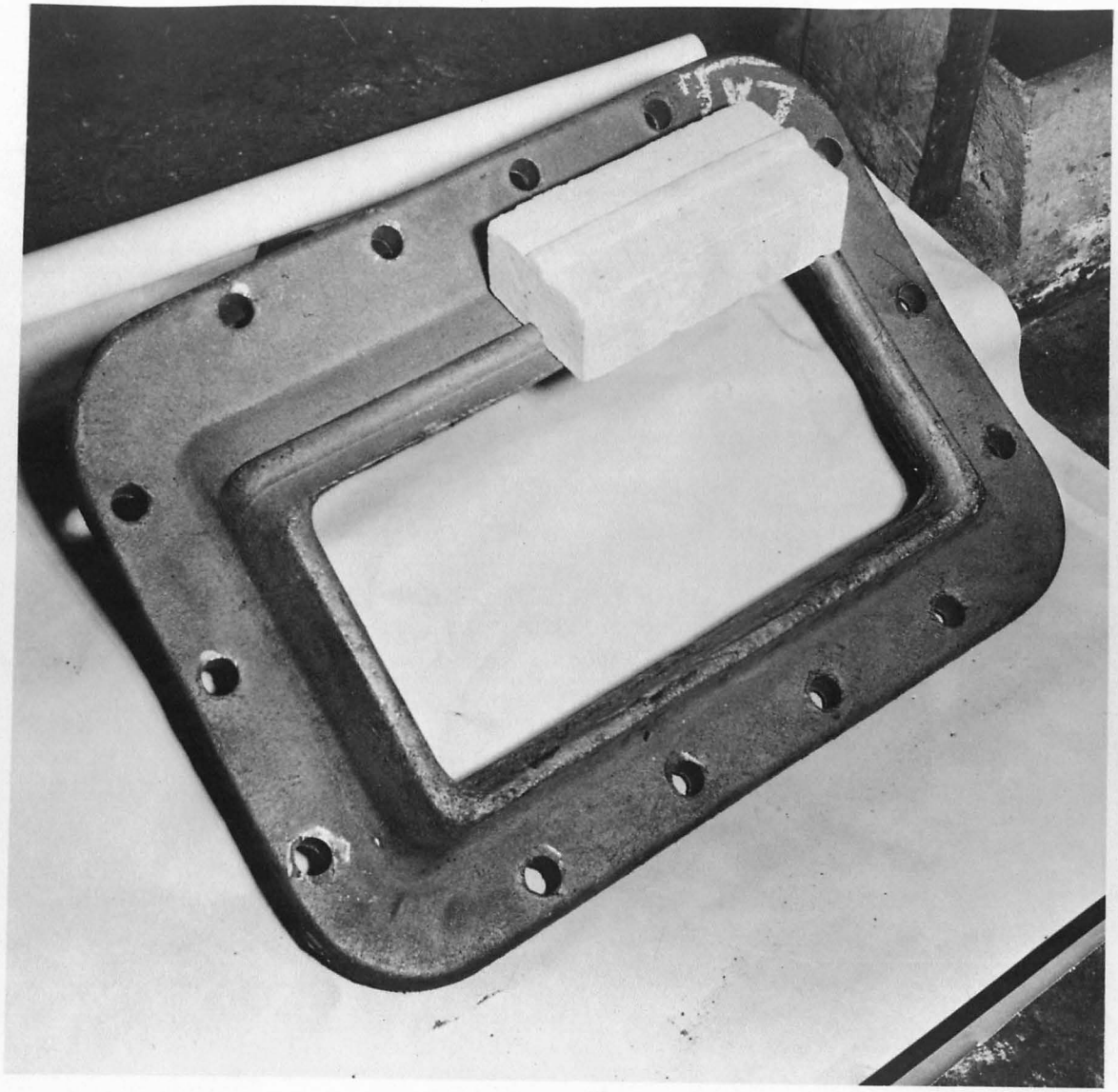

ST-49-3

Photo 4 - 15 Experimental side draft castings ST-200 for Pacific Lines firepan, test arrangements FDS 5, 6, and 7. Casting set at approximate angle as applied in service with single brick in place to illustrate use of retaining ridge and showing how brick protects metal at top edge without changing airflow characteristics.

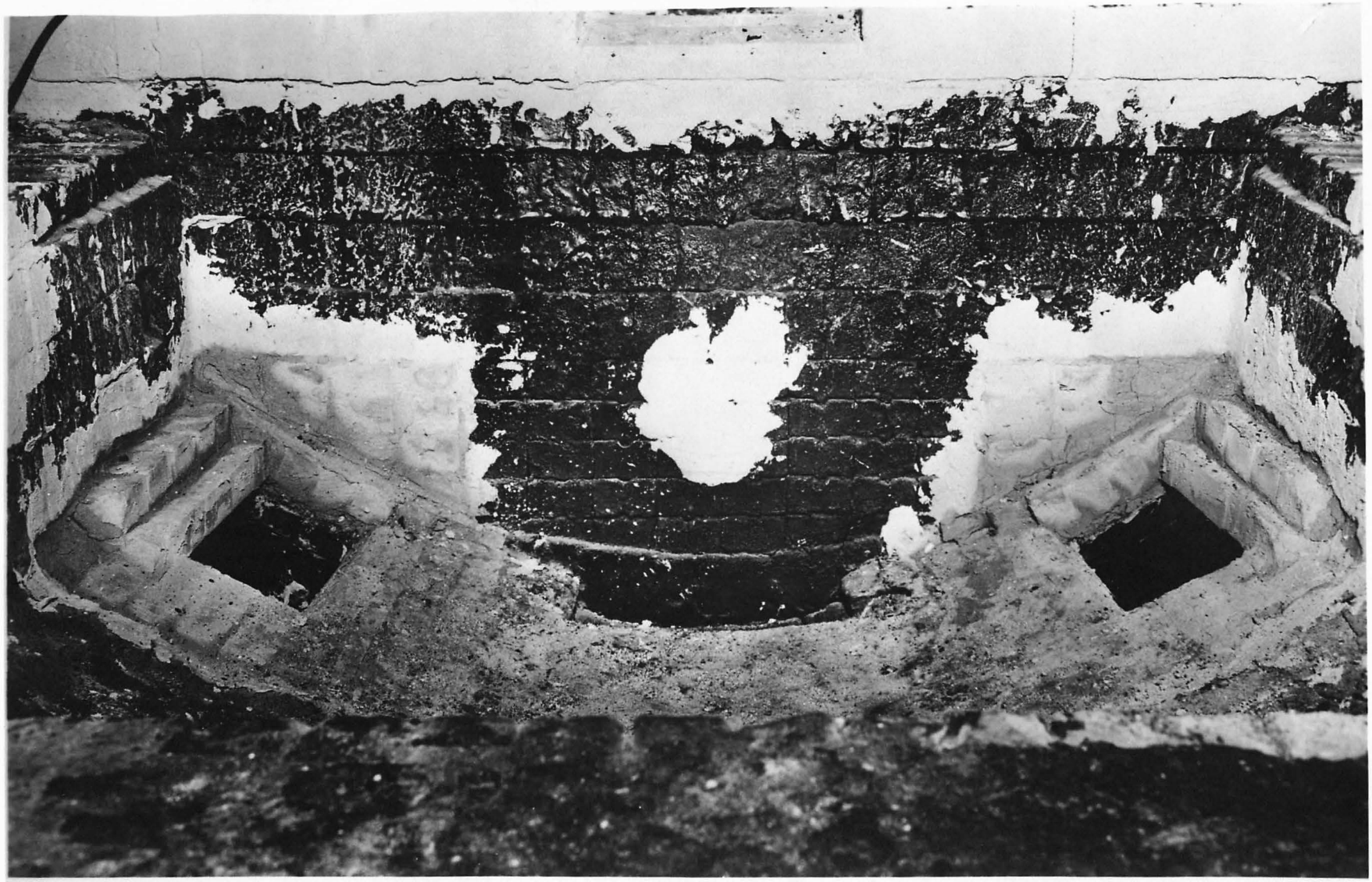

ST-46-1
Photo 4 - 16 Interior of Firepan showing typical installation of brick work at side air ports with ST-200 and ST-202 style draft castings in Pacific Lines firepan.

ST-46-2
Photo 4 - 17 Additional view of side air ports showing method of applying brick when using ST-200 and ST-202 style draft castings in Pacific Lines firepan.

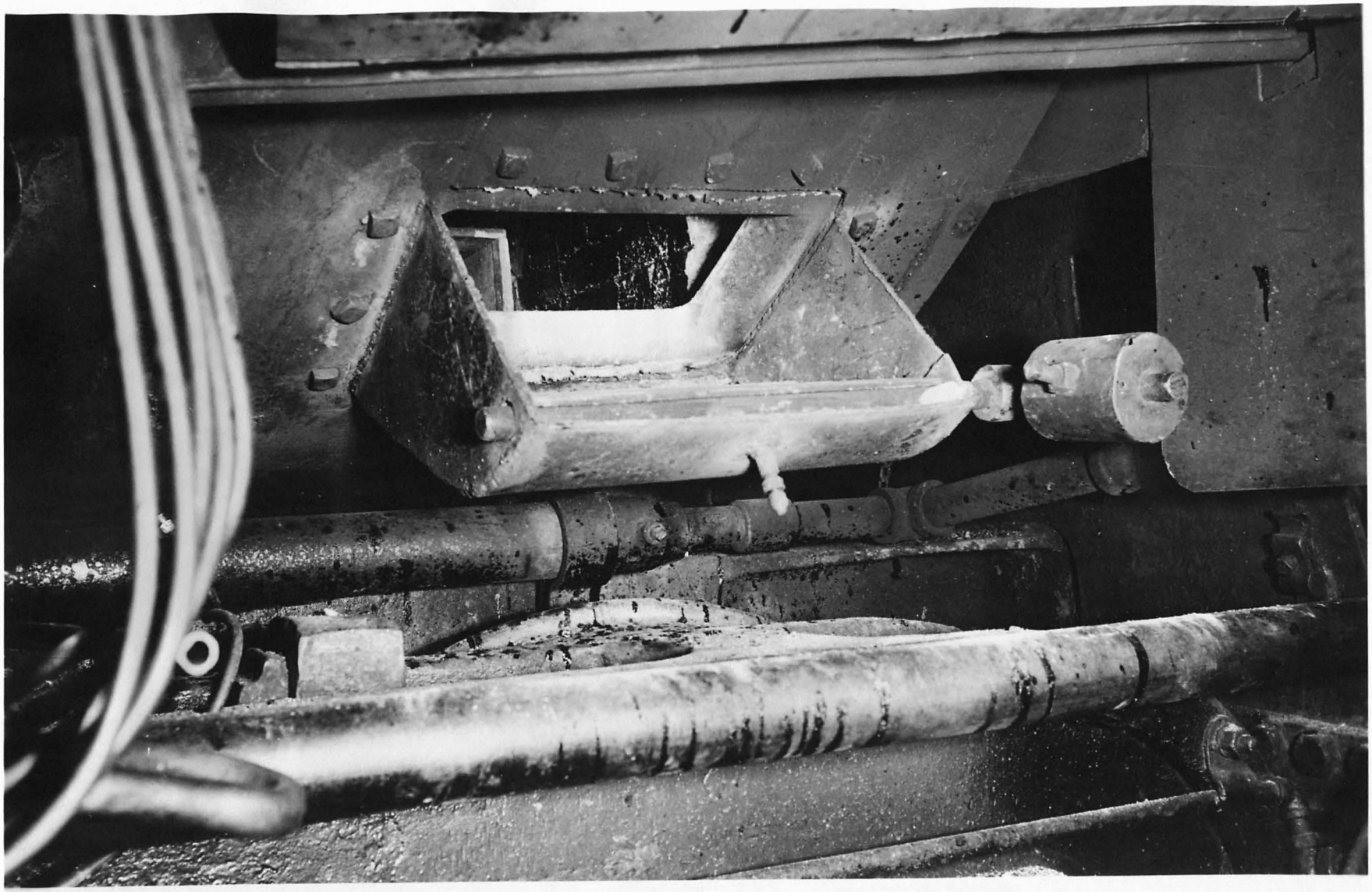

ST-49-1
Photo 4 - 18 Pacific Lines style air chute or hopper for side air ports, modified for use with side draft castings of ST-200 and ST-202 type in Pacific Lines firepan.

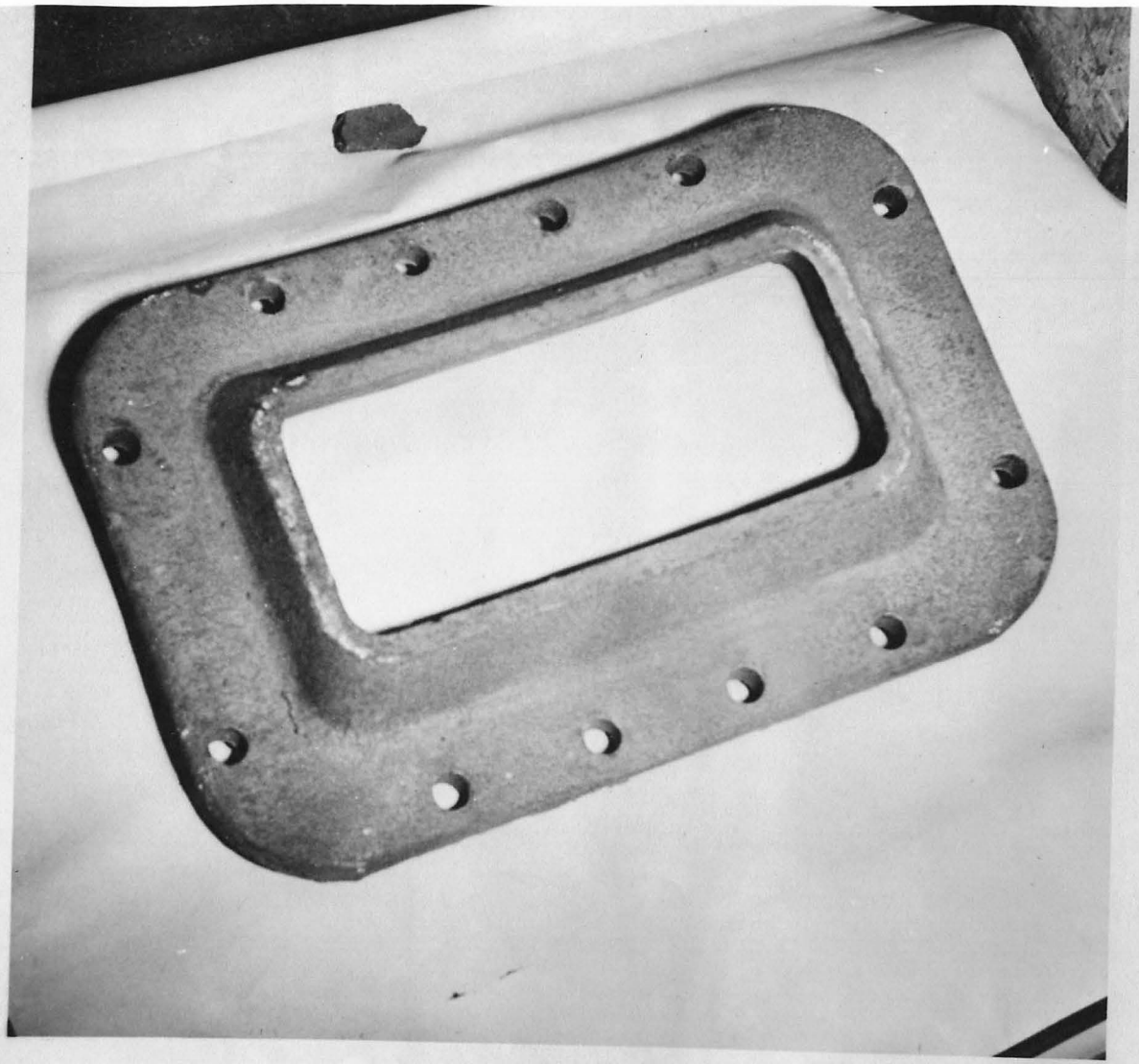

ST-49-2

Photo 4 - 19 Experimental draft castings for center air port, Pacific Lines Standard Draft arrangement showing appearance from fire side. Inverting taper of port, from that of standard casting, reduces area exposed to radiation from flame and improves cooling by entering air, increasing life of casting.

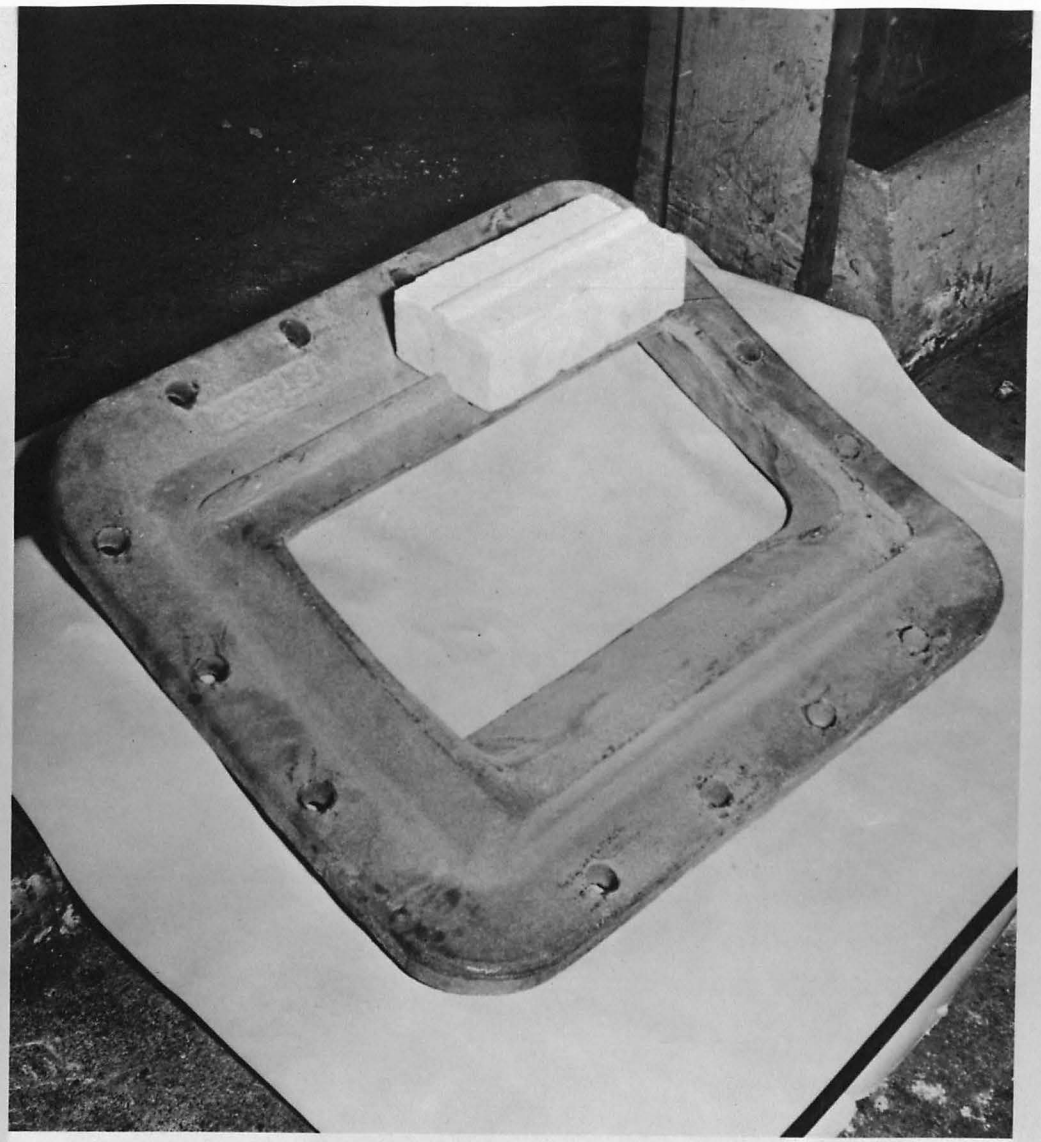

ST-49-4

Photo 4 - 20 Experimental side draft castings ST-202, set at approximate angle as used in service, arrangements FDS-8 and others, showing use of brick retaining ridge for upper edge. Similar to castings ST-200 but with upper and lower edges modified to cause nearly horizontal entry of air into firepan.

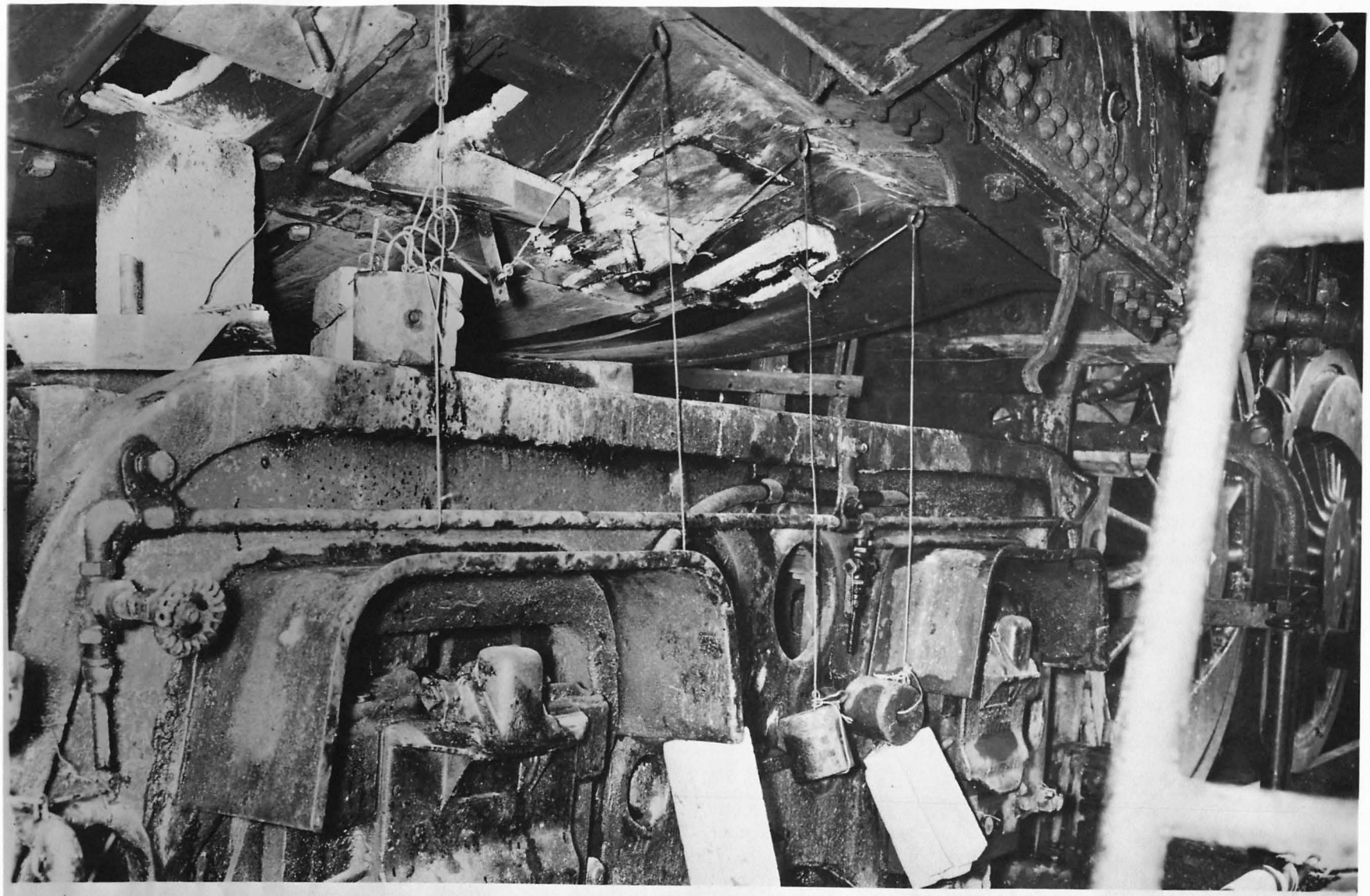

ST-57-1
Photo 4 - 21 View of one side of the Pacific Lines firepan showing the four, adjustable air ports comprising the base arrangement for tests of FDS-22 to 29 Inc. Position number referred to elsewhere began with No. 1 location at front of pan which here is on the right.

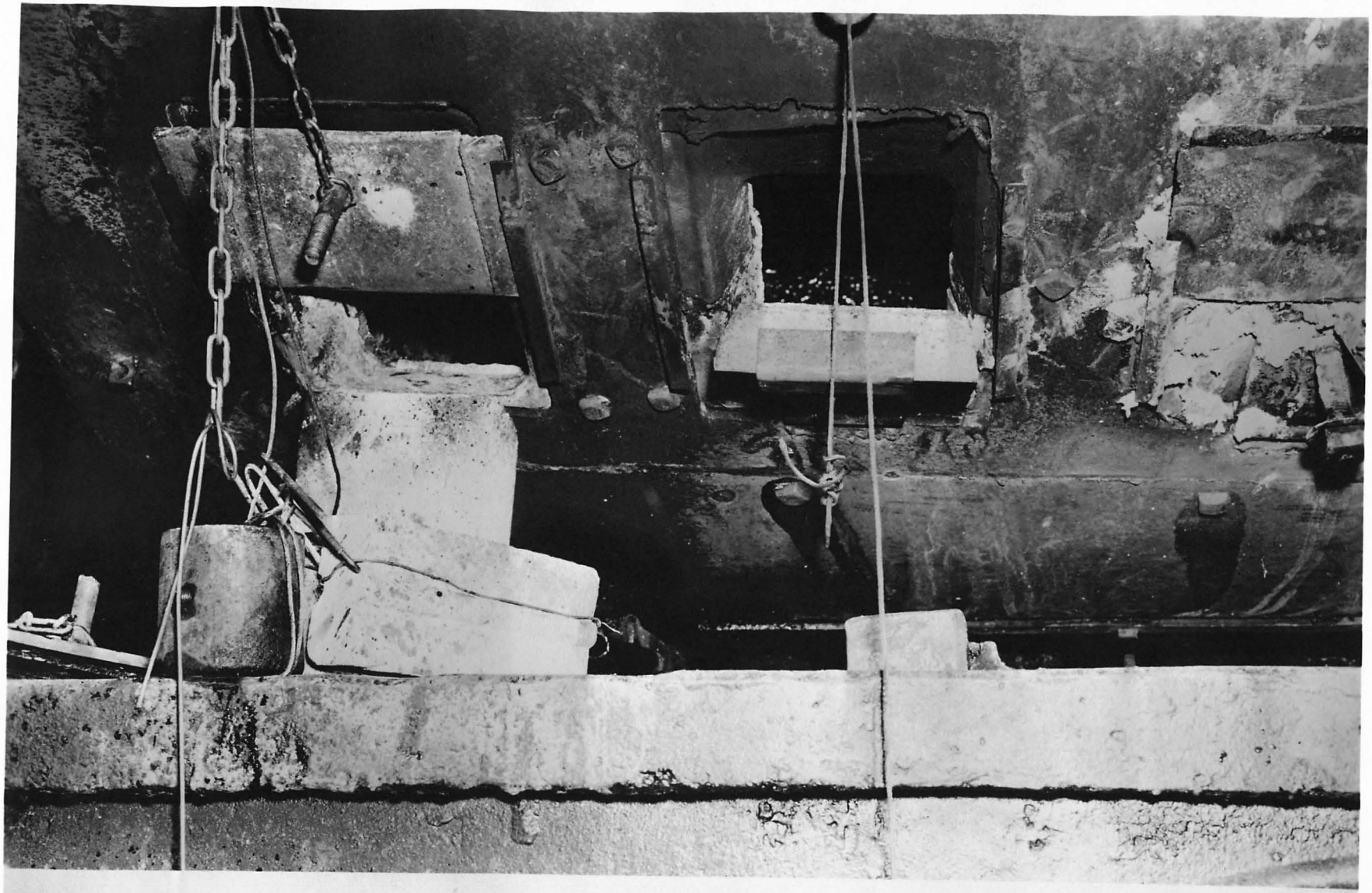

ST-57-2

Photo 4 - 22 View of adjustable, multiple side air ports during arrangements FDS-22 to 29 Inc., showing sliding plate in left hole for adjusting size of air opening and firebrick blocking device, in partially closed position, in right opening.

ST-59-1

Photo 4 - 23 Battelle steam-air jet arrangement FDT-3, with steam pressure gage panel, left side of firepan.

ST-59-2

Photo 4 - 24 View of Battelle steam-air jet in operation. No silencers applied for test installation FDT-3.

ST-61-1
Photo 4 - 25 Application of 40, 2" ID flues for side air ports in T&NO style firepan during trial of this arrangement in combination with one steam-air jet each side, which showed no benefits to be derived from the use of so few jets.

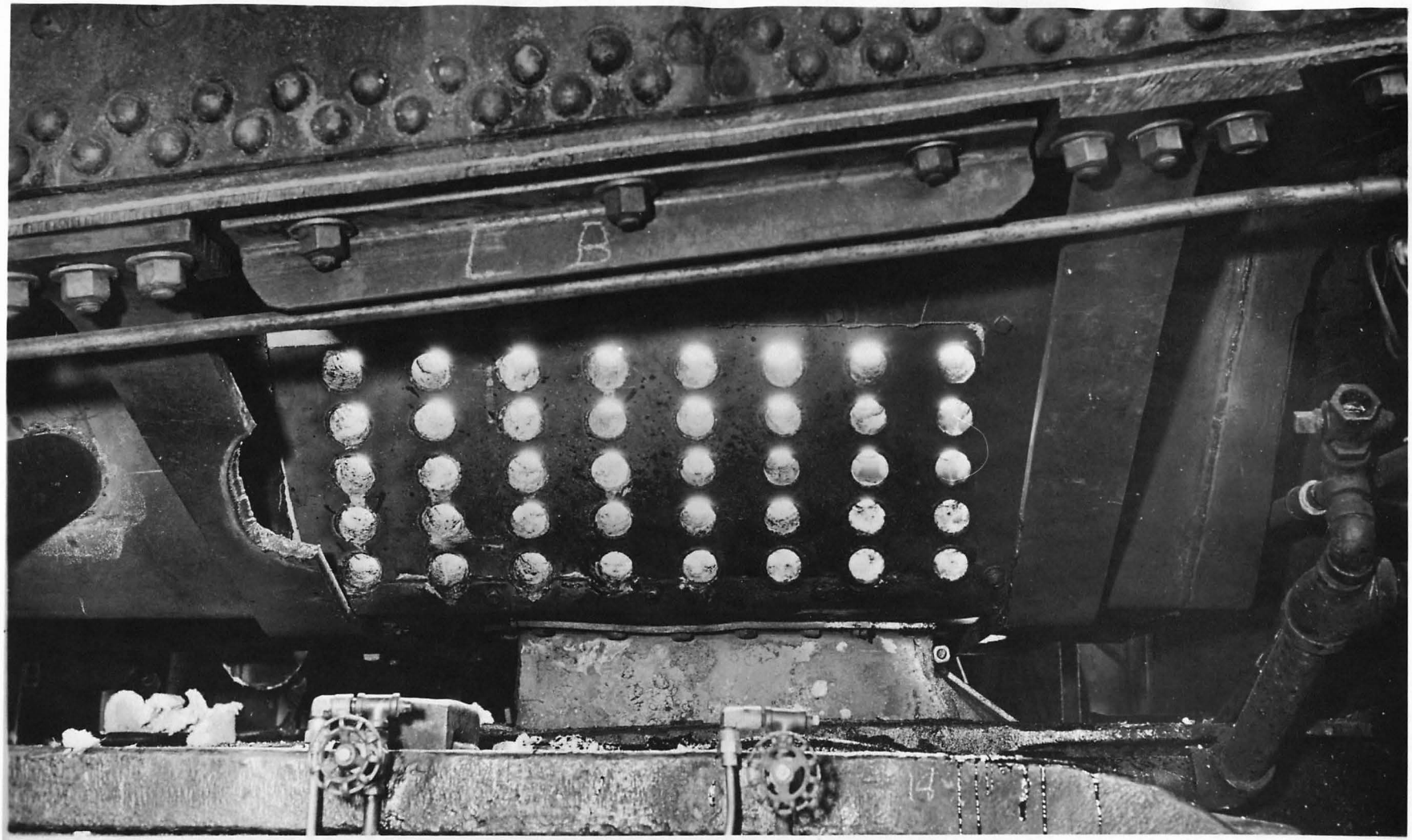

ST-61-2

Photo 4 - 26 View during trial of 40, 2" ID tube air ports each side, in T&NO style firepan, the other air ports also simulating foreign line draft arrangement shown in figure 4-14. Poor results during preliminary trials of numerous combinations of these air tubes caused abandonment of actual tests; however, tube ports, which were applied in a removable plate, were later reinstalled during Dutch Oven tests, arrangements FDT-5 to 9 inc., but with provisions for varying the number in use.

ST-64-1
Photo 4 - 27 Southern Pacific design "Dutch Oven" as applied for trial with a few of the multiple 2" flue air ports visible in foreground. Firepan draft arrangements FDT 7, 8 and 9.

ST-62-2
Photo 4 - 28 Design of "Dutch Oven" as applied for trial, before application of the multiple 2" I.D. air ports used in firepan draft arrangement FDT-5.